RHIC Accelerator Controls Section
Bldg. 1000P Wiring Diagrams
BNL Drawing Number 94028821

Brookhaven National Laboratory, Upton, New York 11973

Created By: Ed Koropsak
Last Updated 4/10/00

Power Distribution
- 🕮 Rack WA-5, WA-6 (Sheet 1)
- 🕮 Rack WA-3, WA-4 (Sheet 2)

SPARES
- 🕮 MADC Channels (Sheet 3)
- 🕮 F/O Channels (Sheet 3)

Serial Links
- 🕮 Event Link (Sheet 4,5)
- 🕮 Real Time Data Link (RTDL) (Sheet 6,7)
- 🕮 Reset Link (Sheet 8)

VME Chassis CFE-WH-PS1 modules
- 🕮 Front End Computer, V108 Utility Module (Sheet 11)
- 🕮 V113/V114 MADC System (Sheet 12)
- 🕮 V115 WFG A: PSWTH1, PSWTV2 (Sheet 14)
- 🕮 V115 WFG B: PSWTH3, PSWTH4 (Sheet 15)
- 🕮 V115 WFG C: PSWTH5, PSWTV6 (Sheet 16)
- 🕮 V115 WFG D: PSXTV1, PSXTV2 (Sheet 17)
- 🕮 V115 WFG E: PSXTH3, PSXTH4 (Sheet 18)
- 🕮 V115 WFG F: PSYTV1, PSYTV2 (Sheet 19)
- 🕮 V115 WFG G: PSYTH3, PSYTH4 (Sheet 20)

VME Chassis CFE-WH-PS2 modules
- 🕮 Front End Computer, V108 Utility Module (Sheet 13)
- 🕮 V113/V114 MADC System (Sheet 12)
- 🕮 ALLEN BRADLEY PLC System (Sheet 28)
- 🕮 V115 WFG H: PSWQ1,PSWQ2 (Sheet 21)
- 🕮 V115 WFG I: PSWQ3, PSWQ4 (Sheet 22)
- 🕮 V115 WFG J: PSWQ5, PSWQ6 (Sheet 23)
- 🕮 V115 WFG K: PSWP1, PSWP2 (Sheet 24)
- 🕮 V115 WFG L: PSWARC20, PSSWM (Sheet 25)
- 🕮 V115 WFG M: PSXARC90, PSYARC90 (Sheet 26)
- 🕮 V120 PERMIT SYSTEM (Sheet 29)
- 🕮 PERMIT SYSTEM INTERFACE (Sheet 30)

VME Chassis CFE-WH-INST modules
- 🕮 Front End Computer, V108 Utility Module (Sheet 9)

VME Chassis CFE-WH-BPM1 modules
- 🕮 Front End Computer, V108 Utility Module (Sheet 10)

VME Chassis CFE-WH-FLG1/VAC modules
- 🕮 Front End Computer, V108 Utility Module (Sheet 27)

NOTE:

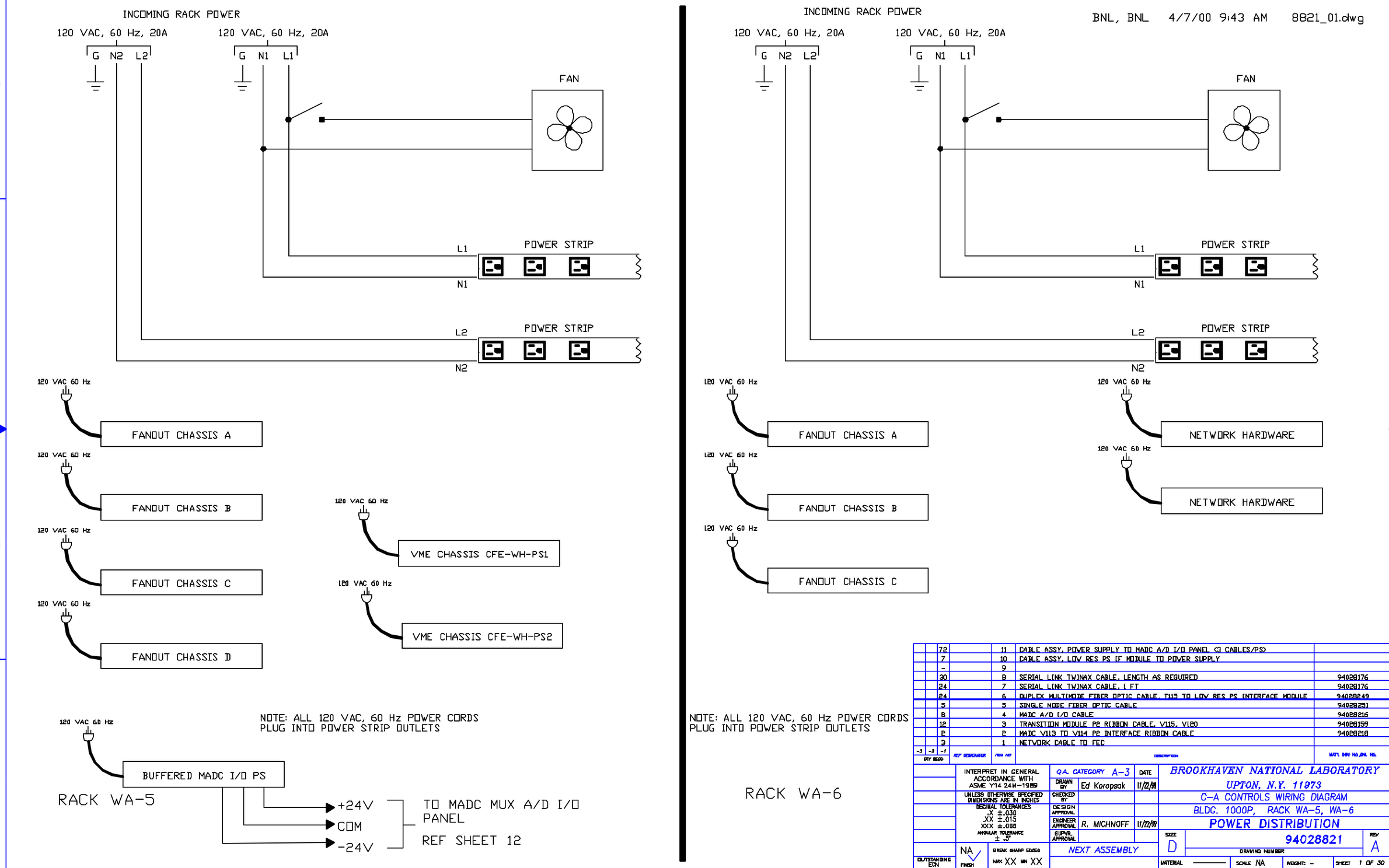

BNL, BNL 4/7/00 9:43 AM 8821_01.dwg

REV.	ZONE	ECN NO.	DATE	BY	CKR	APP.

-3	-2	-1	REF DESIGNATOR	ITEM NO	DESCRIPTION	MAT'L IMM NO./ENG NO.
		72		11	CABLE ASSY, POWER SUPPLY TO MADC A/D I/O PANEL (3 CABLES/PS)	
		7		10	CABLE ASSY, LOW RES PS IF MODULE TO POWER SUPPLY	
		-		9		
		30		8	SERIAL LINK TWINAX CABLE, LENGTH AS REQUIRED	94028176
		24		7	SERIAL LINK TWINAX CABLE, 1 FT	94028176
		24		6	DUPLEX MULTIMODE FIBER OPTIC CABLE, T115 TO LOW RES PS INTERFACE MODULE	94028249
		5		5	SINGLE MODE FIBER OPTIC CABLE	94028251
		8		4	MADC A/D I/O CABLE	94028216
		12		3	TRANSITION MODULE P2 RIBBON CABLE, V115, V120	94028159
		2		2	MADC V113 TO V114 P2 INTERFACE RIBBON CABLE	94028218
		3		1	NETWORK CABLE TO FEC	

INTERPRET IN GENERAL ACCORDANCE WITH ASME Y14 24M-1989	Q.A. CATEGORY A-3	DATE	BROOKHAVEN NATIONAL LABORATORY UPTON, N.Y. 11973	
UNLESS OTHERWISE SPECIFIED DIMENSIONS ARE IN INCHES	DRAWN BY Ed Korapsak	11/22/99	C-A CONTROLS WIRING DIAGRAM	
DECIMAL TOLERANCES .X ±.030 .XX ±.015 XXX ±.005 ANGULAR TOLERANCE ± .5°	CHECKED BY		BLDG. 1000P, RACK WA-5, WA-6	
	DESIGN APPROVAL		POWER DISTRIBUTION	
	ENGINEER APPROVAL R. MICHNOFF	11/22/99		
	SUPVR. APPROVAL		SIZE D	94028821 REV A
OUTSTANDING ECN	NA FINISH	BREAK SHARP EDGES MAX XX MIN XX	NEXT ASSEMBLY	DRAWING NUMBER
			MATERIAL	SCALE NA WEIGHT: - SHEET 1 OF 30

*AUTOCAD

REV.	ZONE	ECN NO.	DATE	BY	CKR	APP.

BNL, BNL 4/7/00 9:44 AM 8821_02.dwg

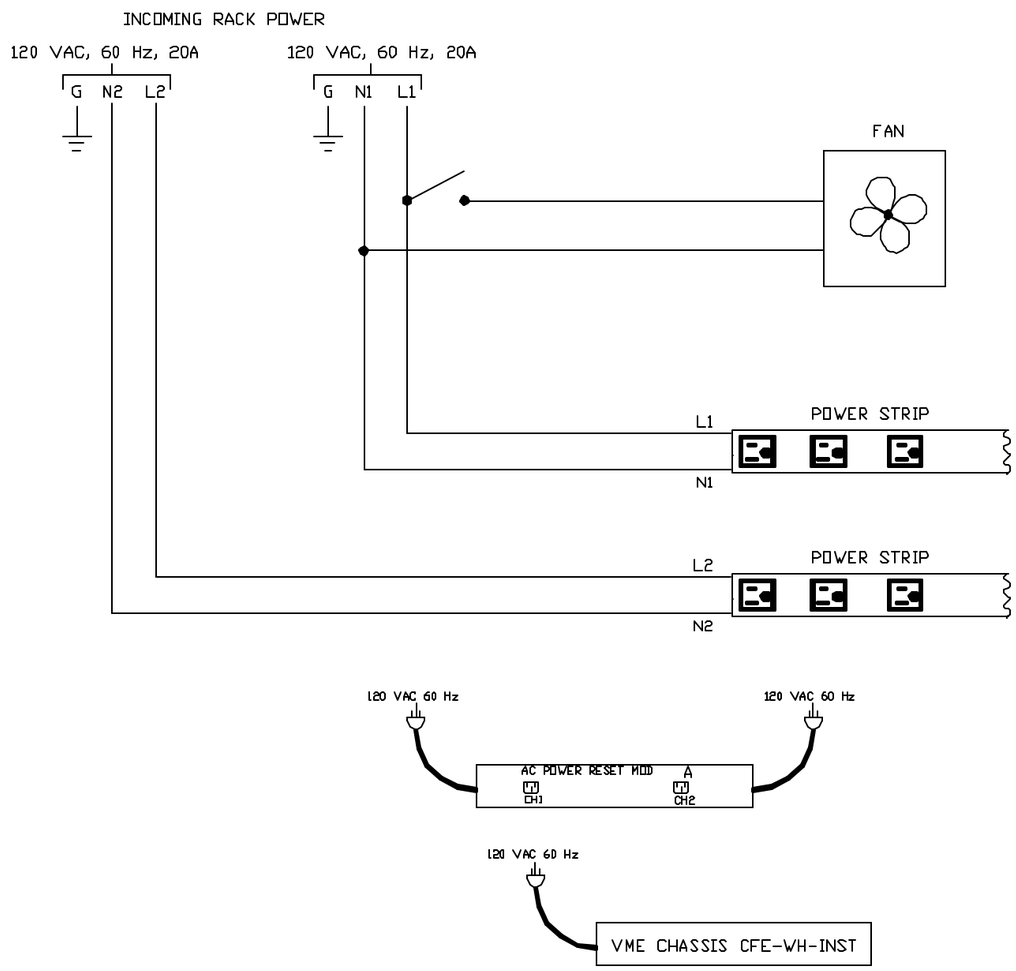

NOTE: ALL 120 VAC, 60 Hz POWER CORDS
PLUG INTO POWER STRIP OUTLETS

RACK WA-3

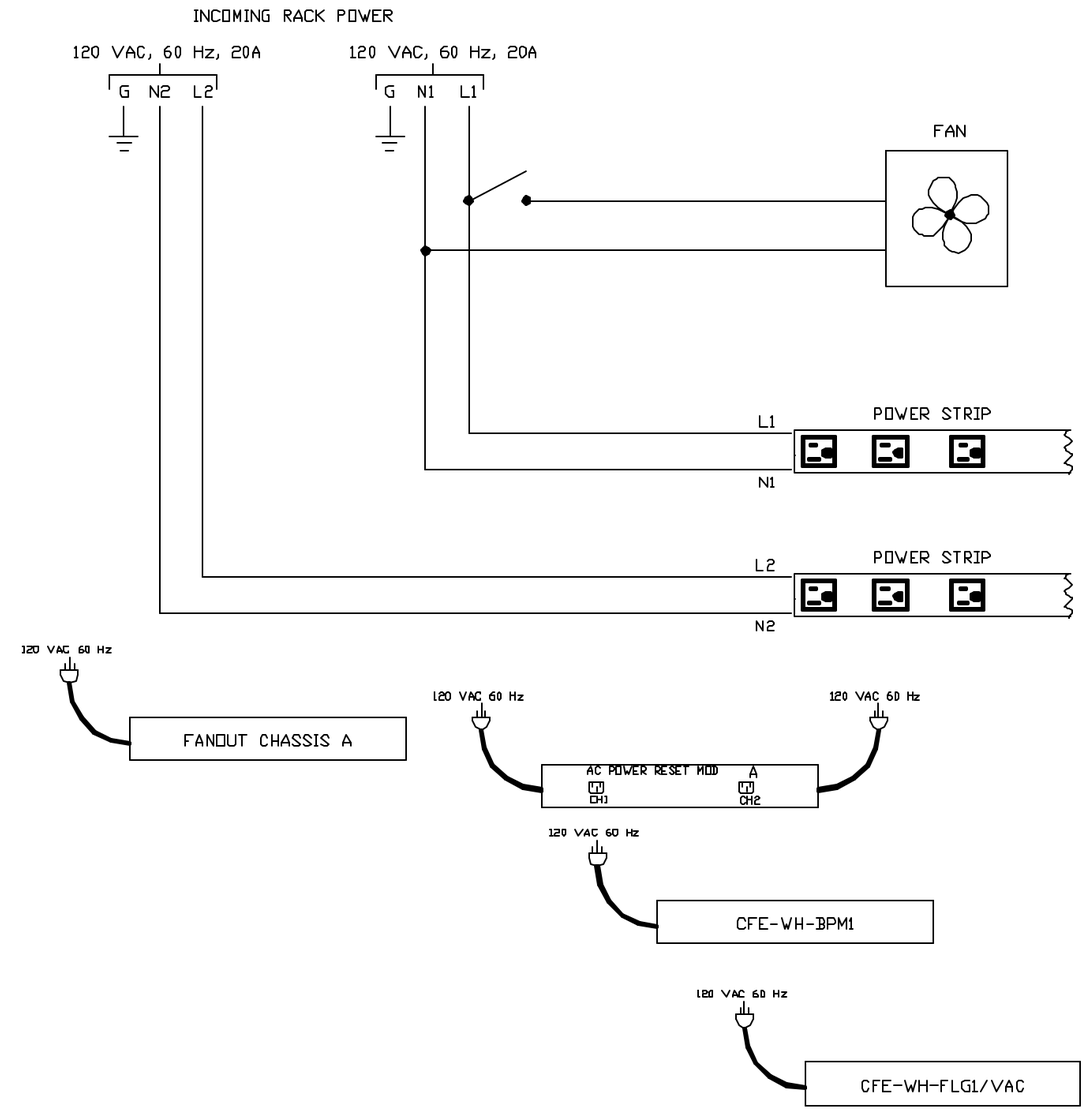

NOTE: ALL 120 VAC, 60 Hz POWER CORDS
PLUG INTO POWER STRIP OUTLETS

RACK WA-4

-3	-2	-1	REF REMARKS	ITEM NO	DESCRIPTION	MAT'L INFO NO./INL NO.
DIT REQD						

INTERPRET IN GENERAL ACCORDANCE WITH ASME Y14.24M-1989
UNLESS OTHERWISE SPECIFIED DIMENSIONS ARE IN INCHES
DECIMAL TOLERANCES .X ±.030 .XX ±.015 .XXX ±.005
ANGULAR TOLERANCE ± .5°
NA FINISH
BREAK SHARP EDGES MAX XX MIN XX
OUTSTANDING ECN

QA CATEGORY A-3		DATE	BROOKHAVEN NATIONAL LABORATORY UPTON, N.Y. 11973
DRAWN BY	Ed Koropsak	11/22/99	C-A CONTROLS WIRING DIAGRAM
CHECKED BY			BLDG. 1000P, RACK WA-3, WA-4
DESIGN APPROVAL			POWER DISTRIBUTION
ENGINEER APPROVAL	R. MICHNOFF	11/22/99	
SUPVR. APPROVAL			
NEXT ASSEMBLY			SIZE D — DRAWING NUMBER 94028821 — REV A
			MATERIAL ——— SCALE NA WEIGHT: – SHEET 2 OF 32

*AUTOCAD

BNL, BNL 4/7/00 1:20 PM 8821_03.dwg

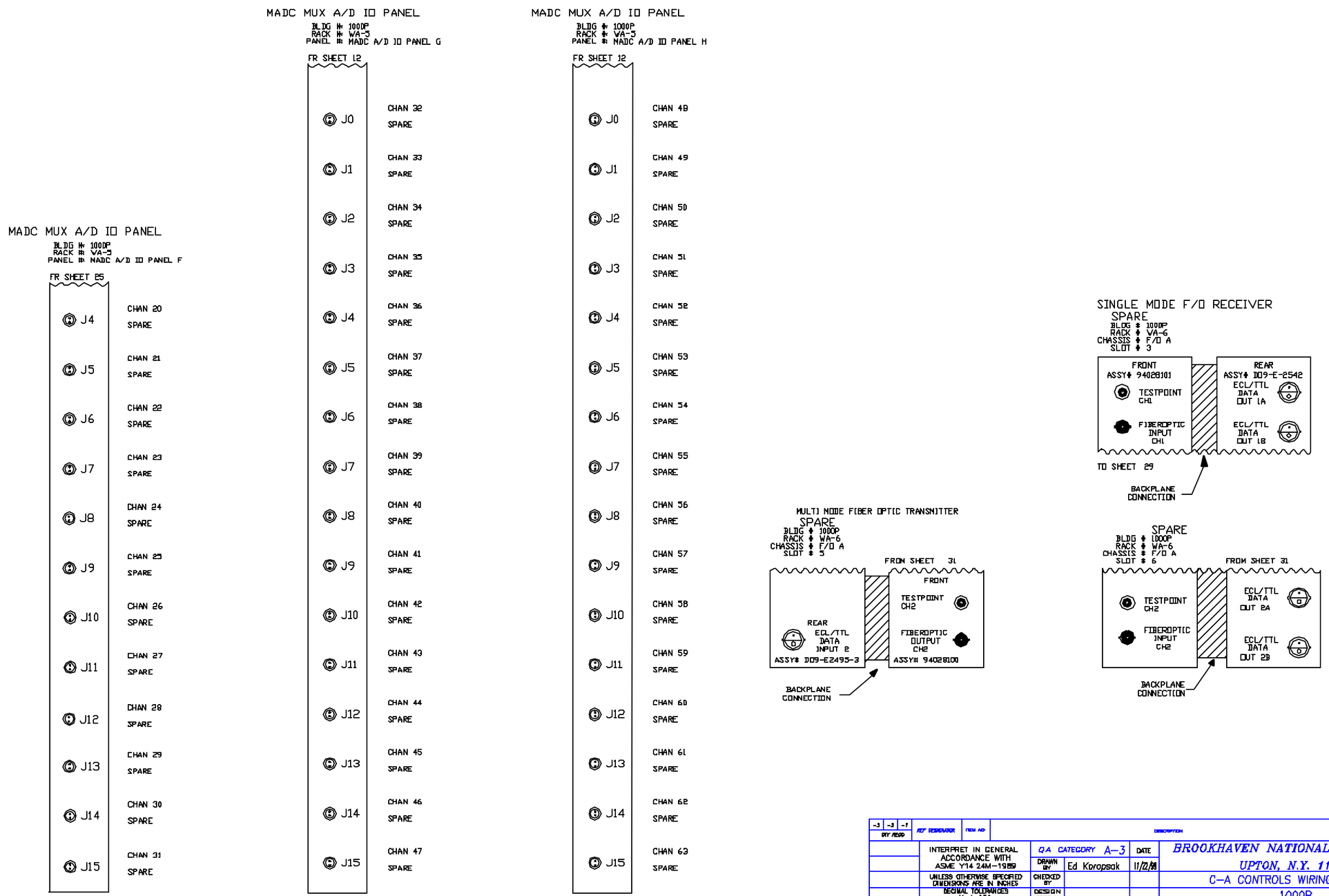

REV.	ZONE	ECN NO.	DATE	BY	CKR	APP.

-3 -2 -1 DIV REQD	REF DESIGNATOR	ITEM NO	DESCRIPTION	MAT'L BAR NO/BNL NO.

INTERPRET IN GENERAL ACCORDANCE WITH ASME Y14 24M-1989

UNLESS OTHERWISE SPECIFIED DIMENSIONS ARE IN INCHES

DECIMAL TOLERANCES
.X ±.030
.XX ±.015
XXX ±.005
ANGULAR TOLERANCE ± .5°

OUTSTANDING ECN

NA FINISH

BREAK SHARP EDGES
MAX XX MIN XX

QA CATEGORY A-3		DATE
DRAWN BY	Ed Koropsak	11/22/99
CHECKED BY		
DESIGN APPROVAL		
ENGINEER APPROVAL	R. MICHNOFF	11/22/99
SUPVR. APPROVAL		

NEXT ASSEMBLY

BROOKHAVEN NATIONAL LABORATORY
UPTON, N.Y. 11973

C-A CONTROLS WIRING DIAGRAM

1000P

SPARE F/O--MADC CHANNELS

SIZE D | 94028821 | REV A

DRAWING NUMBER

MATERIAL ——— | SCALE NA | WEIGHT: – | SHEET 3 OF 32

1 *AUTOCAD

BNL, BNL 4/7/00 1:21 PM 8821_04.dwg

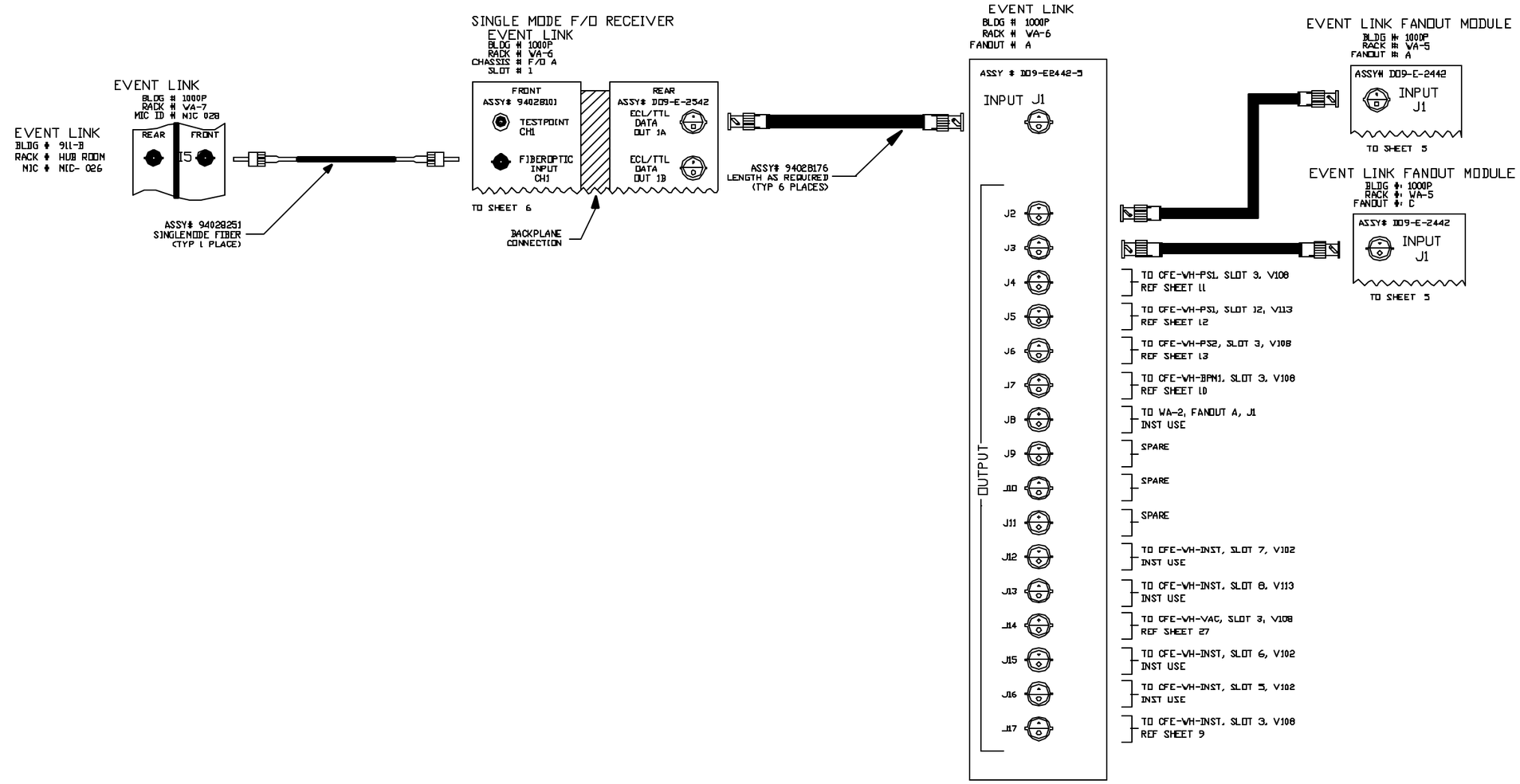

REV.	ZONE	ECN NO.	DATE	BY	CKR	APP.

-3	-2	-1	REF DESIGNATOR	ITEM NO	DESCRIPTION	MAT'L TAB NO/SNL NO.
DRY REQD						

INTERPRET IN GENERAL ACCORDANCE WITH ASME Y14 24M-1989

UNLESS OTHERWISE SPECIFIED DIMENSIONS ARE IN INCHES
DECIMAL TOLERANCES
.X ±.030
.XX ±.015
.XXX ±.005
ANGULAR TOLERANCE ± .5°

NA FINISH

BREAK SHARP EDGES MAX XX MIN XX

OUTSTANDING ECN

QA CATEGORY A-3		DATE
DRAWN BY	Ed Koropsak	11/22/99
CHECKED BY		
DESIGN APPROVAL		
ENGINEER APPROVAL	R MICHNOFF	11/22/99
SUPVR. APPROVAL		

NEXT ASSEMBLY

BROOKHAVEN NATIONAL LABORATORY
UPTON, N.Y. 11973

C-A CONTROLS WIRING DIAGRAM
1000P
EVENT LINK

SIZE D | 94028821 | REV A
DRAWING NUMBER

MATERIAL ——— | SCALE NA | WEIGHT: – | SHEET 4 OF 32

1 *AUTOCAD

BNL, BNL 4/7/00 4:03 PM 8821_05.dwg

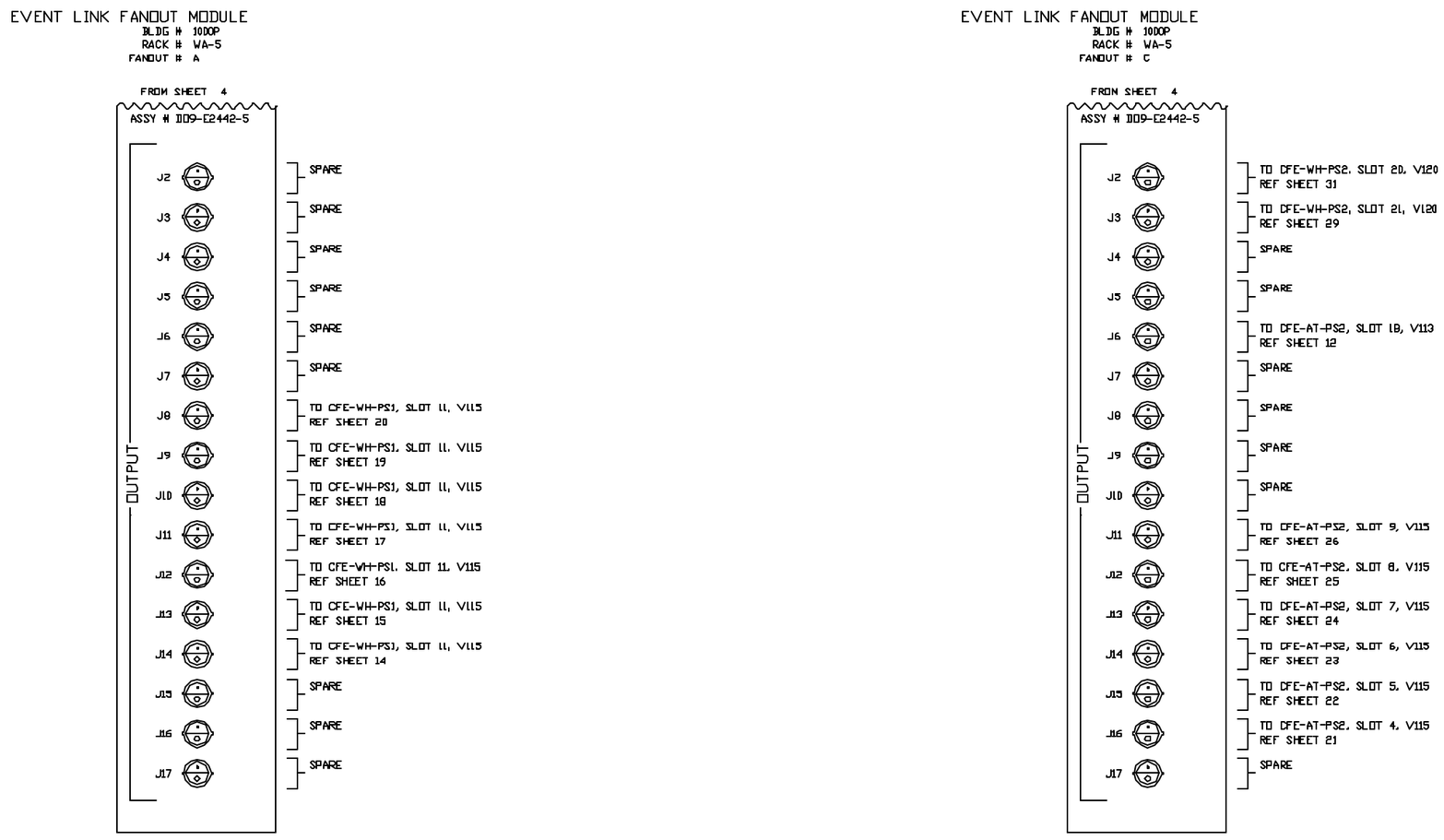

REV.	ZONE	ECN NO.	DATE	BY	CKR	APP.

-3	-2	-1	REF DESIGNATOR	ITEM NO	DESCRIPTION	MAT'L TAN NO/SNL NO.
DIV REQD						

INTERPRET IN GENERAL ACCORDANCE WITH ASME Y14.24M-1989

UNLESS OTHERWISE SPECIFIED DIMENSIONS ARE IN INCHES
DECIMAL TOLERANCES
.X ±.030
.XX ±.015
.XXX ±.005
ANGULAR TOLERANCE ± .5°

OUTSTANDING ECN

NA FINISH

BREAK SHARP EDGES
MAX XX MIN XX

QA CATEGORY A-3		DATE
DRAWN BY	Ed Korapsak	11/22/99
CHECKED BY		
DESIGN APPROVAL		
ENGINEER APPROVAL	R MICHNOFF	11/22/99
SUPVR. APPROVAL		

NEXT ASSEMBLY

BROOKHAVEN NATIONAL LABORATORY
UPTON, N.Y. 11973

C-A CONTROLS WIRING DIAGRAM
1000P
EVENT LINK

SIZE D | 94028821 | REV A
DRAWING NUMBER

MATERIAL ——— | SCALE NA | WEIGHT: – | SHEET 5 of 32

1 *AUTOCAD

BNL, BNL 4/10/00 9:14 AM 8821_06.dwg

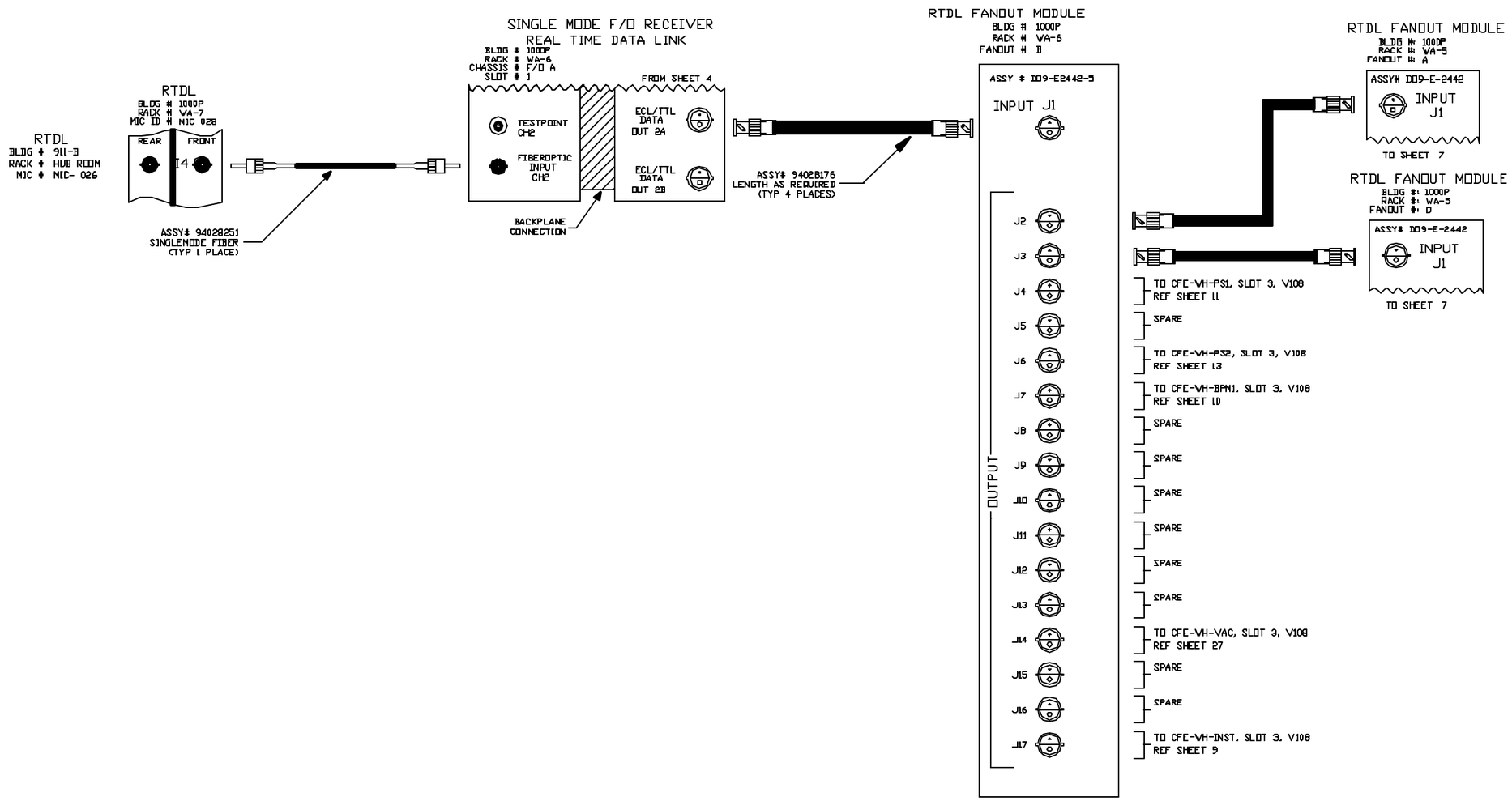

REV.	ZONE	ECN NO.	DATE	BY	CKR	APP.

-3 -2 -1 DIV REQD	REF DESIGNATOR	ITEM NO	DESCRIPTION	MAT'L TAG NO./ENG. NO.

INTERPRET IN GENERAL ACCORDANCE WITH ASME Y14 24M-1989

UNLESS OTHERWISE SPECIFIED DIMENSIONS ARE IN INCHES
DECIMAL TOLERANCES
.X ±.030
.XX ±.015
.XXX ±.005
ANGULAR TOLERANCE ± .5°

OUTSTANDING ECN

NA FINISH

BREAK SHARP EDGES MAX XX MIN XX

QA CATEGORY A-3		DATE
DRAWN BY	Ed Koropsak	11/22/99
CHECKED BY		
DESIGN APPROVAL		
ENGINEER APPROVAL	R MICHNOFF	11/22/99
SUPVR. APPROVAL		

NEXT ASSEMBLY

BROOKHAVEN NATIONAL LABORATORY
UPTON, N.Y. 11973

C-A CONTROLS WIRING DIAGRAM
1000P
REAL TIME DATA LINK

SIZE D | 94028821 | REV A
DRAWING NUMBER

MATERIAL ——— SCALE NA WEIGHT: – SHEET 6 OF 32

1 *AUTOCAD

BNL, BNL 4/10/00 9:15 AM 8821_07.dwg

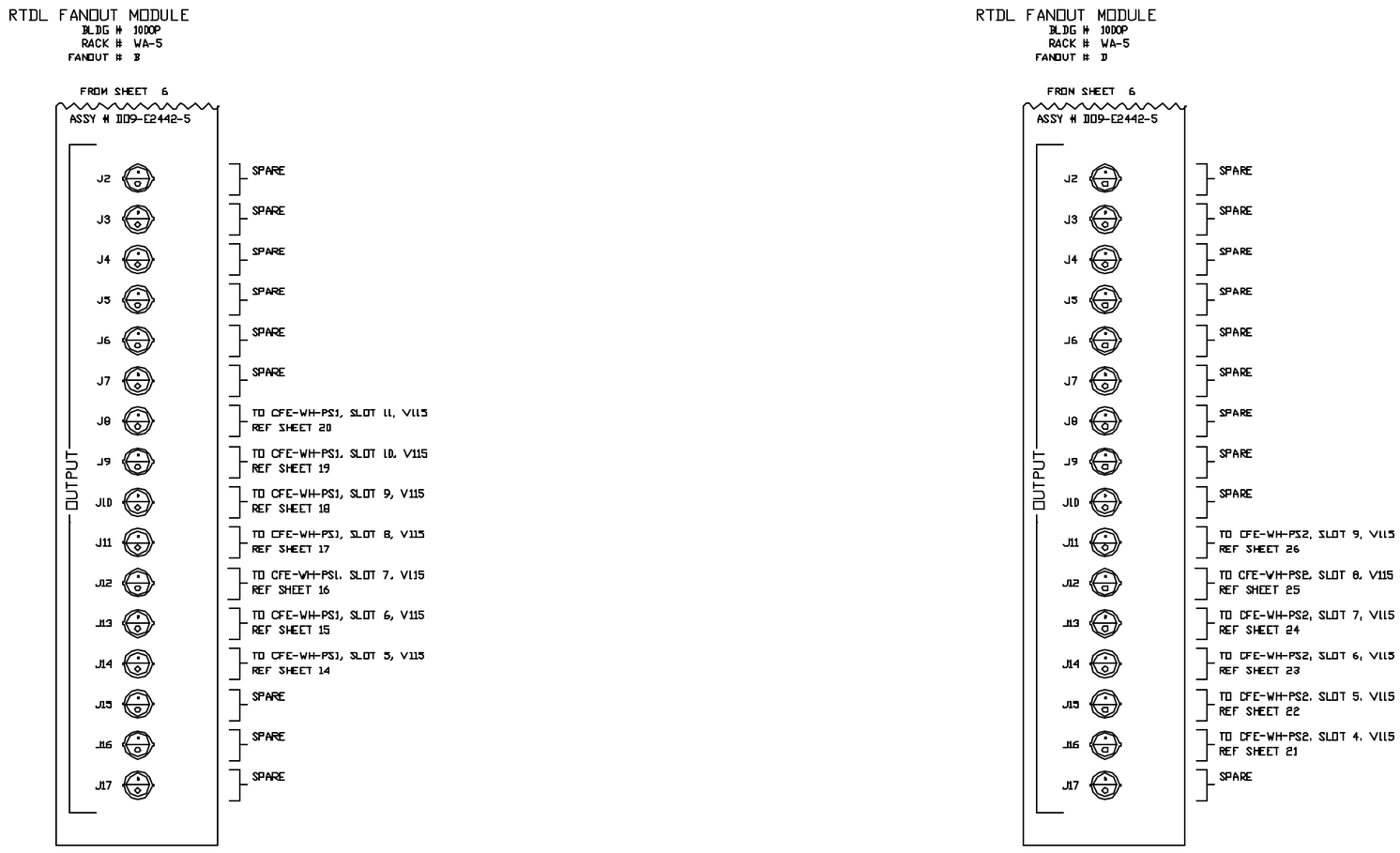

REV.	ZONE	ECN NO.	DATE	BY	CKR	APP.

-3	-2	-1	REF DESIGNATOR	ITEM NO	DESCRIPTION	MAT'L TAN NO, SNL NO.
DIV REQD						

INTERPRET IN GENERAL ACCORDANCE WITH ASME Y14.24M-1989

UNLESS OTHERWISE SPECIFIED DIMENSIONS ARE IN INCHES
DECIMAL TOLERANCES
.X ±.030
.XX ±.015
.XXX ±.005
ANGULAR TOLERANCE ± .5°

OUTSTANDING ECN

NA FINISH

BREAK SHARP EDGES
MAX XX MIN XX

QA CATEGORY A-3		DATE
DRAWN BY	Ed Koropsak	11/22/99
CHECKED BY		
DESIGN APPROVAL		
ENGINEER APPROVAL	R MICHNOFF	11/22/99
SUPVR. APPROVAL		

NEXT ASSEMBLY

BROOKHAVEN NATIONAL LABORATORY
UPTON, N.Y. 11973

C-A CONTROLS WIRING DIAGRAM

1000P

REAL TIME DATA LINK

SIZE D | 94028821 | REV A

DRAWING NUMBER

MATERIAL ——— | SCALE NA | WEIGHT: – | SHEET 7 OF 32

1 *AUTOCAD

BNL, BNL 4/10/00 9:16 AM 8821_08.dwg

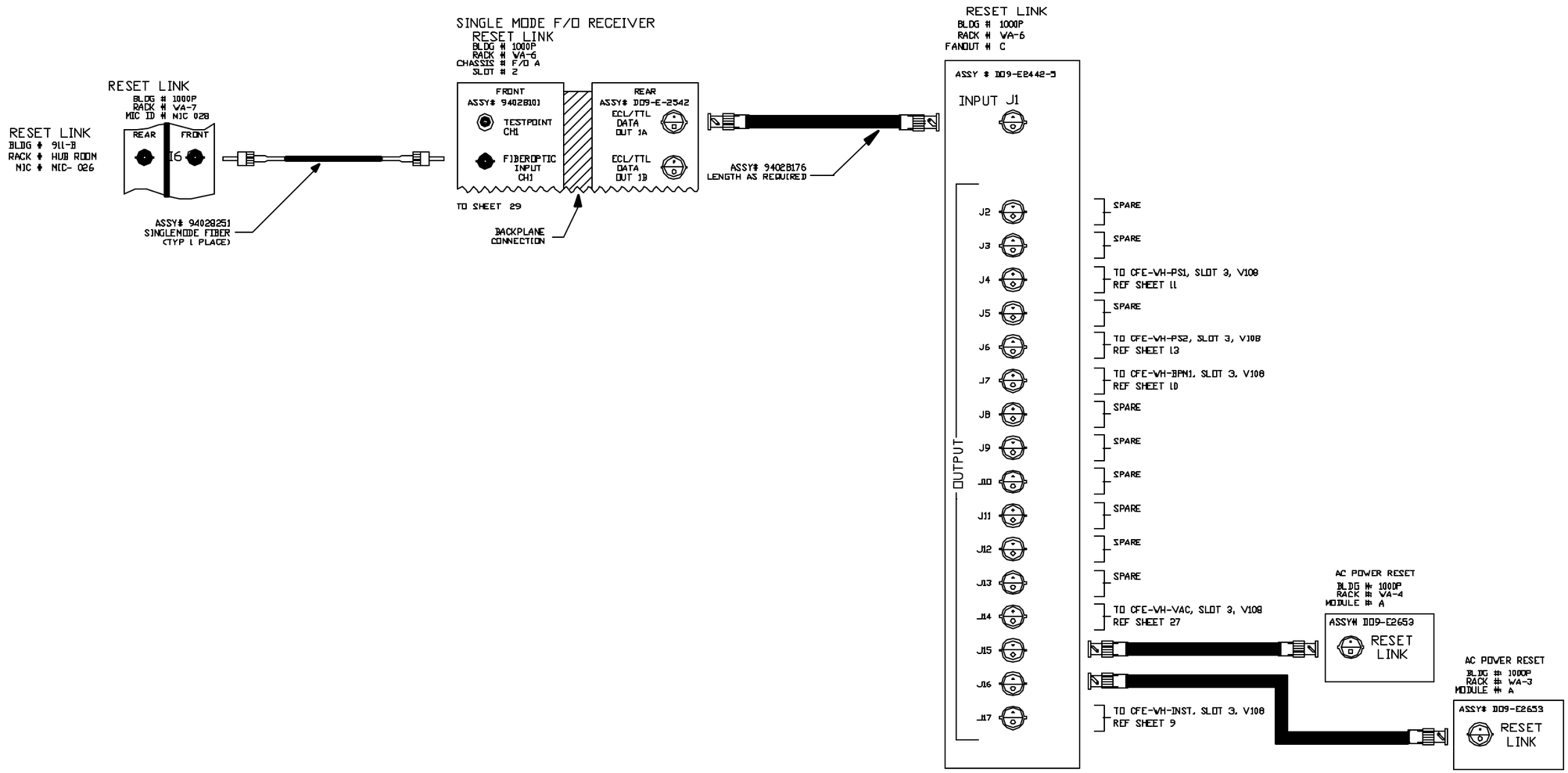

REV.	ZONE	ECN NO.	DATE	BY	CKR	APP.

-3 -2 -1 DTY REQD	REF DESIGNATOR	ITEM NO	DESCRIPTION	MATL DWG NO, SPEC NO.

INTERPRET IN GENERAL ACCORDANCE WITH ASME Y14 24M-1989

UNLESS OTHERWISE SPECIFIED DIMENSIONS ARE IN INCHES

DECIMAL TOLERANCES
.X ±.030
.XX ±.015
.XXX ±.005
ANGULAR TOLERANCE ± .5°

OUTSTANDING ECN

NA FINISH

BREAK SHARP EDGES
MAX XX MIN XX

QA CATEGORY A-3		DATE
DRAWN BY	Ed Koropsak	11/22/99
CHECKED BY		
DESIGN APPROVAL		
ENGINEER APPROVAL	R MICHNOFF	11/22/99
SUPVR. APPROVAL		

NEXT ASSEMBLY

BROOKHAVEN NATIONAL LABORATORY
UPTON, N.Y. 11973

C-A CONTROLS WIRING DIAGRAM
1000P
RESET LINK

SIZE D | 94028821 | REV A
DRAWING NUMBER

MATERIAL ——— | SCALE NA | WEIGHT: – | SHEET 8 OF 32

1 *AUTOCAD

BNL, BNL 4/10/00 9:18 AM 8821_09.dwg

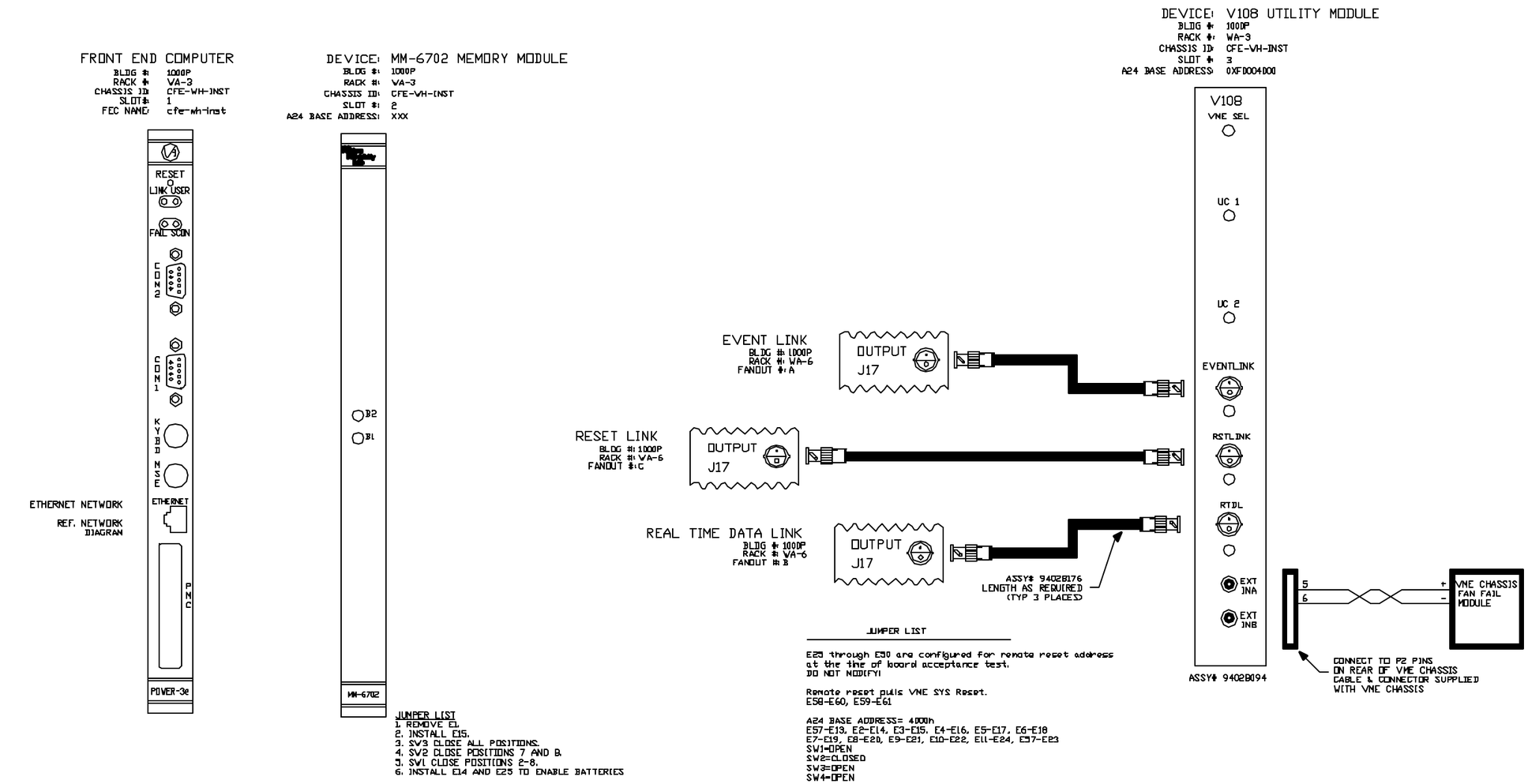

JUMPER LIST

E25 through E30 are configured for remote reset address at the time of board acceptance test.
DO NOT MODIFY!

Remote reset pulls VME SYS Reset.
E58-E60, E59-E61

A24 BASE ADDRESS= 4000h
E57-E13, E2-E14, E3-E15, E4-E16, E5-E17, E6-E18
E7-E19, E8-E20, E9-E21, E10-E22, E11-E24, E37-E23
SW1=OPEN
SW2=CLOSED
SW3=OPEN
SW4=OPEN

REV.	ZONE	ECN NO.	DATE	BY	CKR	APP.

-3 -2 -1 DIV REQD	REF DESIGNATOR	ITEM NO	DESCRIPTION	MAT'L INH NO./INL NO.

INTERPRET IN GENERAL ACCORDANCE WITH ASME Y14 24M-1989

UNLESS OTHERWISE SPECIFIED DIMENSIONS ARE IN INCHES
DECIMAL TOLERANCES
.X ±.030
.XX ±.015
.XXX ±.005
ANGULAR TOLERANCE ± .5°

OUTSTANDING ECN | NA FINISH | BREAK SHARP EDGES MAX XX MIN XX

QA CATEGORY A-3		DATE
DRAWN BY	Ed Koropsak	11/21/99
CHECKED BY		
DESIGN APPROVAL		
ENGINEER APPROVAL	R MICHNOFF	11/21/99
SUPVR. APPROVAL		

NEXT ASSEMBLY

BROOKHAVEN NATIONAL LABORATORY
UPTON, N.Y. 11973

C-A CONTROLS WIRING DIAGRAM
1000P, VME CHASSIS CFE-WH-INST
FT END COMP/V108 MODULE

SIZE D | 94028821 | REV A
DRAWING NUMBER

MATERIAL ——— | SCALE NA | WEIGHT: - | SHEET 9 OF 32

1 *AUTOCAD

BNL, BNL 4/10/00 9:20 AM 8821_10.dwg

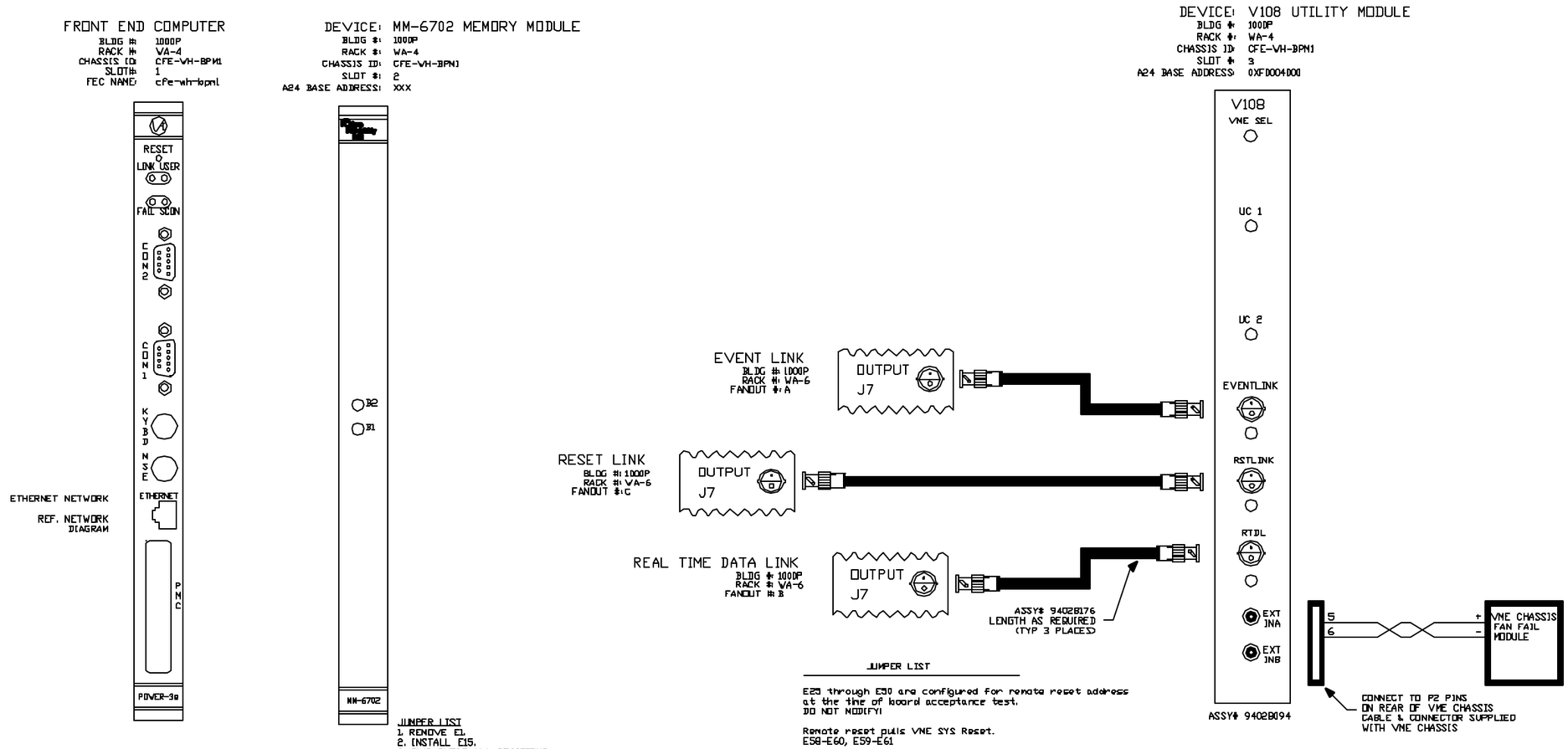

JUMPER LIST
1. REMOVE E1.
2. INSTALL E15.
3. SW3 CLOSE ALL POSITIONS.
4. SW2 CLOSE POSITIONS 7 AND 8.
5. SW1 CLOSE POSITIONS 2-8.
6. INSTALL E14 AND E25 TO ENABLE BATTERIES

JUMPER LIST

E25 through E50 are configured for remote reset address at the time of board acceptance test.
DO NOT MODIFY!

Remote reset pulls VME SYS Reset.
E58-E60, E59-E61

A24 BASE ADDRESS= 4000h
E57-E13, E2-E14, E3-E15, E4-E16, E5-E17, E6-E18
E7-E19, E8-E20, E9-E21, E10-E22, E11-E24, E57-E23
SW1=OPEN
SW2=CLOSED
SW3=OPEN
SW4=OPEN

REV.	ZONE	ECN NO.	DATE	BY	CKR	APP.

-3 -2 -1	REF DESIGNATOR	ITEM NO	DESCRIPTION	MAT'L INFO NO./SNL NO.
QTY REQD				

INTERPRET IN GENERAL ACCORDANCE WITH ASME Y14 24M-1989
UNLESS OTHERWISE SPECIFIED DIMENSIONS ARE IN INCHES
DECIMAL TOLERANCES .X ±.030 .XX ±.015 .XXX ±.005 ANGULAR TOLERANCE ± .5°
OUTSTANDING ECN: NA
FINISH
BREAK SHARP EDGES NAX XX MIN XX

QA CATEGORY A-3		DATE
DRAWN BY	Ed Koropsak	11/24/99
CHECKED BY		
DESIGN APPROVAL		
ENGINEER APPROVAL	R. MICHNOFF	11/24/99
SUPVR. APPROVAL		

NEXT ASSEMBLY

BROOKHAVEN NATIONAL LABORATORY
UPTON, N.Y. 11973
C-A CONTROLS WIRING DIAGRAM
1000P, VME CHASSIS CFE-WH-BPM1
FT END COMP/V108 MODULE

SIZE D | 94028821 | REV A
DRAWING NUMBER
MATERIAL ——— | SCALE NA | WEIGHT: - | SHEET 10 OF 32

1 *AUTOCAD

BNL, BNL 4/10/00 9:20 AM 8821_11.dwg

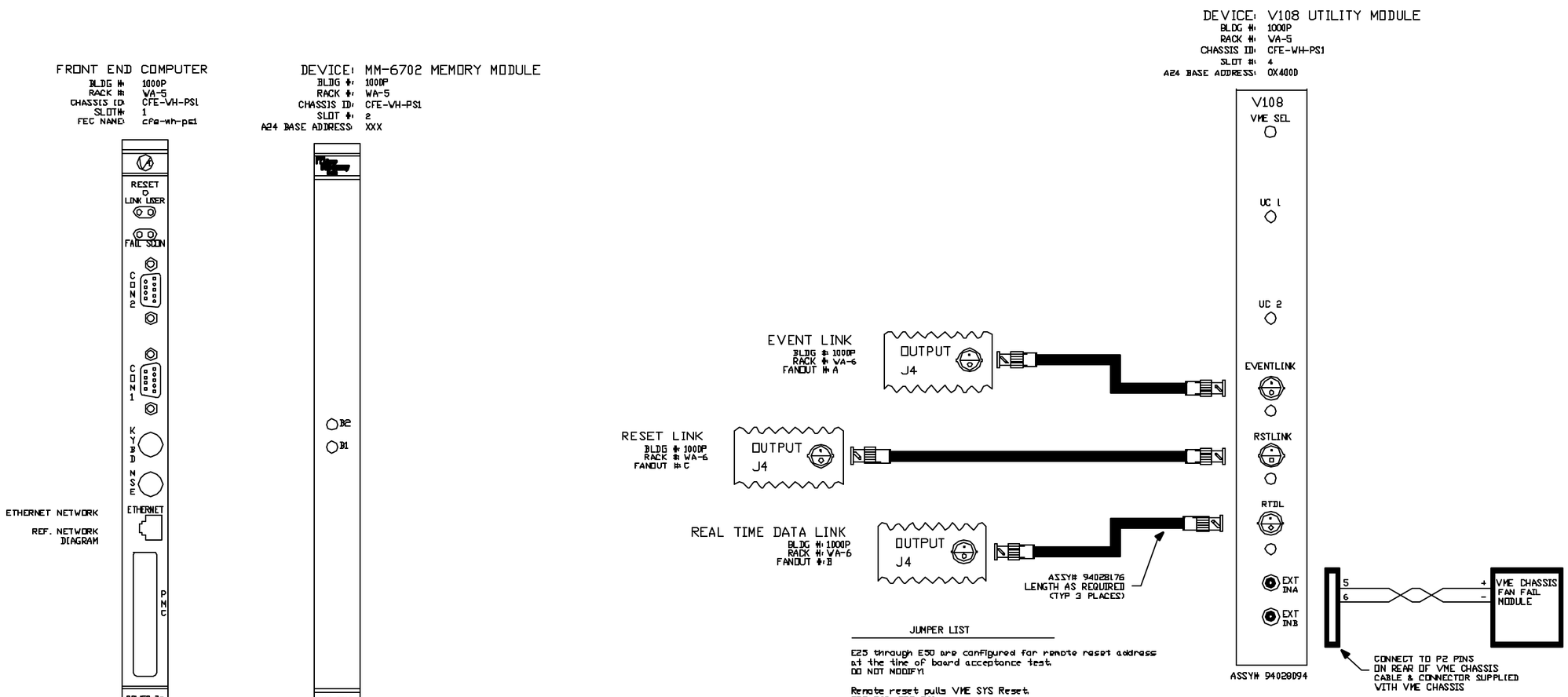

JUMPER LIST
1. REMOVE E1.
2. INSTALL E15.
3. SW3 CLOSE ALL POSITIONS.
4. SW2 CLOSE POSITIONS 7 AND 8.
5. SW1 CLOSE POSITIONS 2-8.
6. INSTALL E14 AND E25 TO ENABLE BATTERIES

JUMPER LIST

E25 through E50 are configured for remote reset address at the time of board acceptance test.
DO NOT MODIFY!

Remote reset pulls VME SYS Reset.
E58-E60, E59-E61

A24 BASE ADDRESS= 4000h
E57-E13, E2-E14, E3-E15, E4-E16, E5-E17, E6-E18
E7-E19, E8-E20, E9-E21, E10-E22, E11-E24, E57-E23
SW1=OPEN
SW2=CLOSED
SW3=OPEN
SW4=OPEN

REV.	ZONE	ECN NO.	DATE	BY	CKR	APP.

-3 -2 -1 DIV REQD	REF DESIGNATOR	ITEM NO	DESCRIPTION	MAT'L INFO NO./DWG NO.

INTERPRET IN GENERAL ACCORDANCE WITH ASME Y14 24M-1989
UNLESS OTHERWISE SPECIFIED DIMENSIONS ARE IN INCHES
DECIMAL TOLERANCES .X ±.030 .XX ±.015 XXX ±.005 ANGULAR TOLERANCE ± .5°
NA FINISH
BREAK SHARP EDGES MAX XX MIN XX
OUTSTANDING ECN

QA CATEGORY A-3		DATE
DRAWN BY	Ed Koropsak	11/22/99
CHECKED BY		
DESIGN APPROVAL		
ENGINEER APPROVAL	R MICHNOFF	11/22/99
SUPVR. APPROVAL		

NEXT ASSEMBLY

BROOKHAVEN NATIONAL LABORATORY
UPTON, N.Y. 11973
C-A CONTROLS WIRING DIAGRAM
1000P, VME CHASSIS CFE-WH-PS1
FT END COMP/V108 UTIL MODULE

SIZE D | DRAWING NUMBER 94028821 | REV A

MATERIAL — SCALE NA WEIGHT: – SHEET 11 OF 32

1 *AUTOCAD

BNL, BNL 4/10/00 9:36 AM 8821_12.dwg

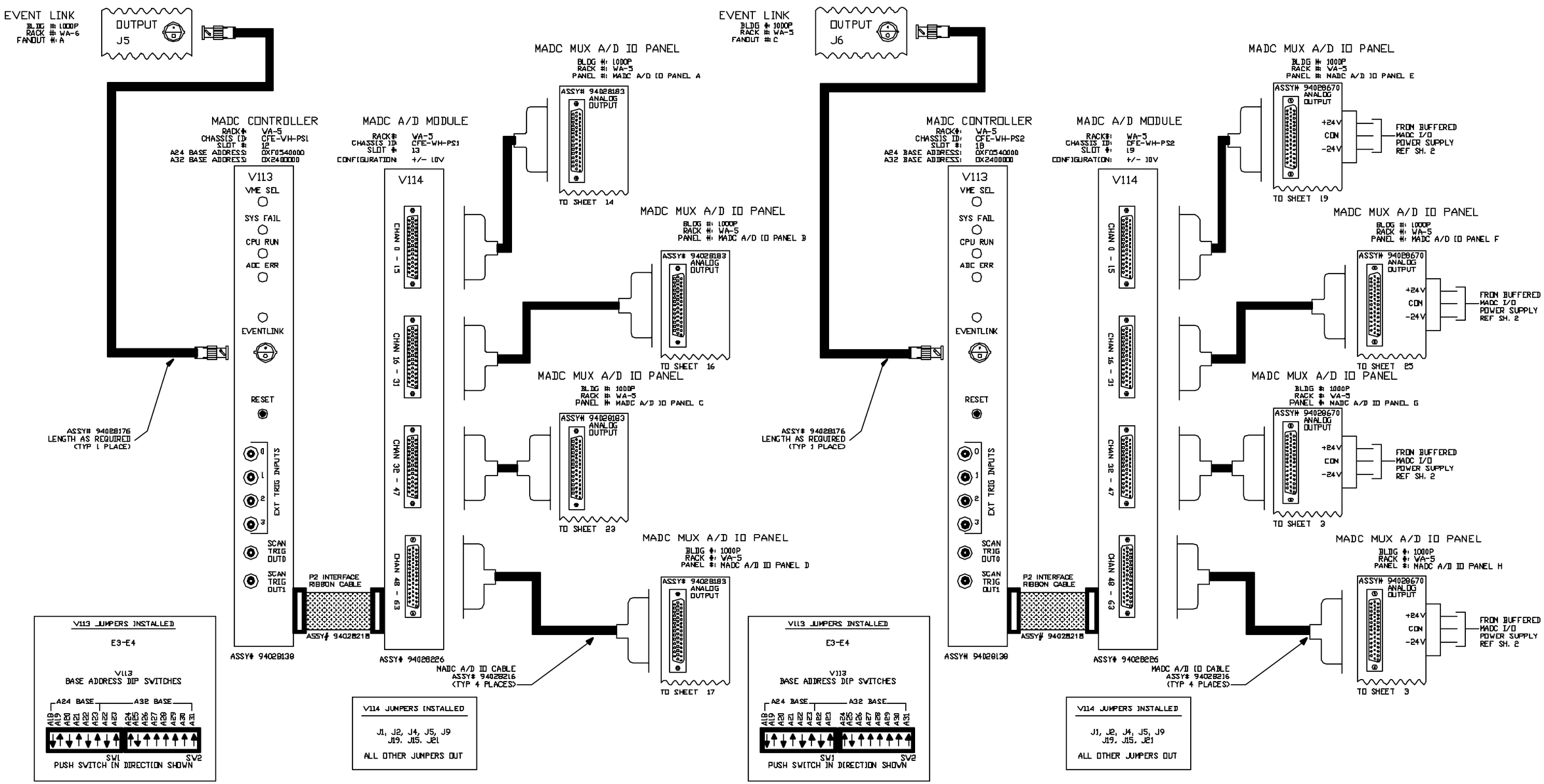

REV.	ZONE	ECN NO.	DATE	BY	CKR	APP.

-3	-2	-1	REF DESIGNATOR	ITEM NO	DESCRIPTION	MAT'L SPEC NO./DWG NO.
QTY REQD						

INTERPRET IN GENERAL ACCORDANCE WITH ASME Y14.24M-1989

UNLESS OTHERWISE SPECIFIED DIMENSIONS ARE IN INCHES

DECIMAL TOLERANCES
X ±.030
.XX ±.015
.XXX ±.005
ANGULAR TOLERANCE
± .5°

OUTSTANDING ECN: NA

FINISH ✓

BREAK SHARP EDGES

MAX. XX MIN. XX

Q.A. CATEGORY A-3		DATE
DRAWN BY	Ed Koropsak	11/22/98
CHECKED BY		
DESIGN APPROVAL		
ENGINEER APPROVAL	R. MICHNOFF	11/22/98
SUPVR. APPROVAL		

NEXT ASSEMBLY

BROOKHAVEN NATIONAL LABORATORY
UPTON, N.Y. 11973

C-A CONTROLS WIRING DIAGRAM
1000P, VME CHASSIS CFE-WH-PS1/PS2
MADC SYSTEM

SIZE D — DRAWING NUMBER 94028821 — REV A

MATERIAL ——— SCALE NA WEIGHT: – SHEET 12 OF 32

*AUTOCAD

BNL, BNL 4/10/00 9:37 AM 8821_13.dwg

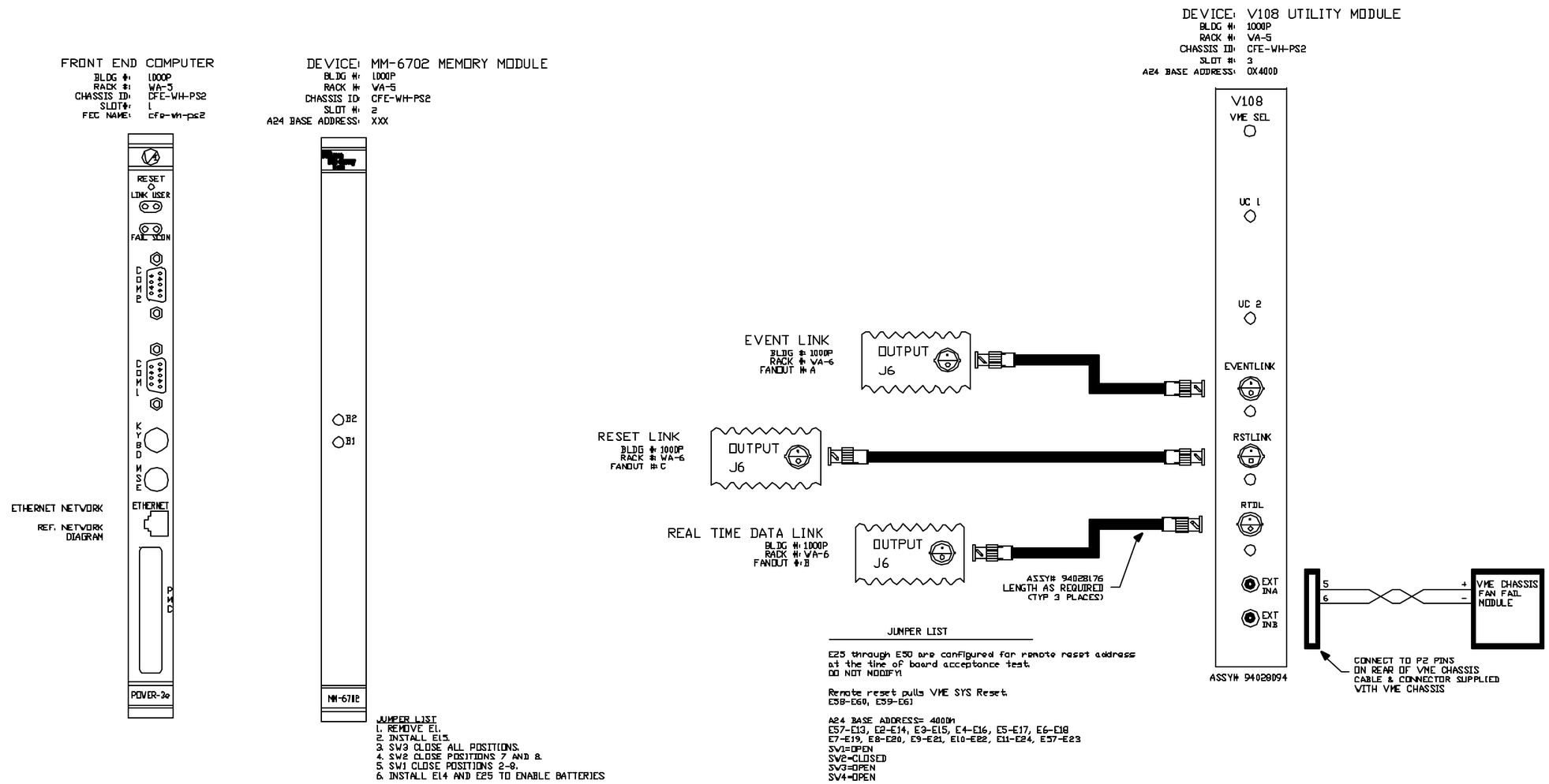

JUMPER LIST
1. REMOVE E1.
2. INSTALL E15.
3. SW3 CLOSE ALL POSITIONS.
4. SW2 CLOSE POSITIONS 7 AND 8.
5. SW1 CLOSE POSITIONS 2-8.
6. INSTALL E14 AND E25 TO ENABLE BATTERIES

JUMPER LIST

E25 through E50 are configured for remote reset address at the time of board acceptance test.
DO NOT MODIFY!

Remote reset pulls VME SYS Reset.
E58-E60, E59-E61

A24 BASE ADDRESS= 4000h
E57-E13, E2-E14, E3-E15, E4-E16, E5-E17, E6-E18
E7-E19, E8-E20, E9-E21, E10-E22, E11-E24, E57-E23
SW1=OPEN
SW2=CLOSED
SW3=OPEN
SW4=OPEN

REV.	ZONE	ECN NO.	DATE	BY	CKR	APP.

-3 -2 -1 DIV REQD	REF DESIGNATOR	ITEM NO	DESCRIPTION	MAT'L IMM NO./SNL NO.

INTERPRET IN GENERAL ACCORDANCE WITH ASME Y14 24M-1989
UNLESS OTHERWISE SPECIFIED DIMENSIONS ARE IN INCHES
DECIMAL TOLERANCES .X ±.030 .XX ±.015 XXX ±.005
ANGULAR TOLERANCE ± .5°
NA FINISH
BREAK SHARP EDGES MAX XX MIN XX
OUTSTANDING ECN

QA CATEGORY A-3		DATE
DRAWN BY	Ed Koropsak	11/22/99
CHECKED BY		
DESIGN APPROVAL		
ENGINEER APPROVAL	R MICHNOFF	11/22/99
SUPVR. APPROVAL		

NEXT ASSEMBLY

BROOKHAVEN NATIONAL LABORATORY
UPTON, N.Y. 11973
C-A CONTROLS WIRING DIAGRAM
1000P, VME CHASSIS CFE-WH-PS2
FT END COMP/V108 UTIL MODULE

SIZE D | 94028821 | REV A
DRAWING NUMBER
MATERIAL ——— | SCALE NA | WEIGHT: - | SHEET 13 OF 32

1 *AUTOCAD

REV.	ZONE	ECN NO.	DATE	BY	CKR	APP.

BNL, BNL 4/10/00 9:37 AM 8821_14.dwg

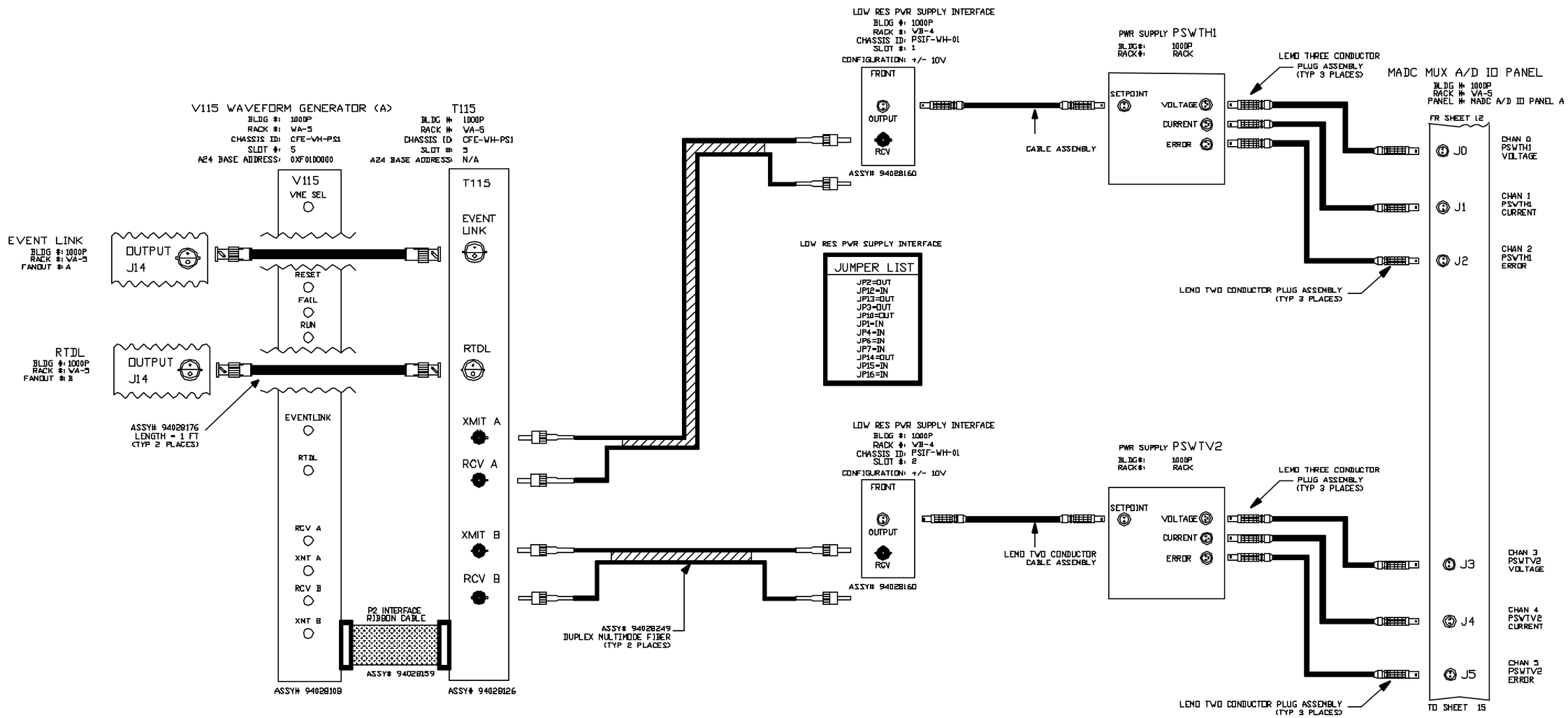

V115 JUMPER LIST
JP3=IN JP4=IN JP1=OUT JP2=OUT
A24 BASE ADDRESS JB1-A23=IN JB1-A22=IN JB1-A21=IN JB1-A20=OUT JB1-A19=IN JB1-A18=IN

-3	-2	-1	REF DESIGNATOR	ECN NO	DESCRIPTION	MAT'L SPEC NO./INS. MFG.
DATE ECAD						

	INTERPRET IN GENERAL ACCORDANCE WITH ASME Y14 24M-1989	QA CATEGORY A-3	DATE	BROOKHAVEN NATIONAL LABORATORY
		DRAWN BY Ed Koropsak	11/22/98	UPTON, N.Y. 11973
	UNLESS OTHERWISE SPECIFIED DIMENSIONS ARE IN INCHES	CHECKED BY		C-A CONTROLS WIRING DIAGRAM
	DECIMAL TOLERANCES .X ±.030 .XX ±.015 .XXX ±.008 ANGULAR TOLERANCE ± .5°	DESIGN APPROVAL		1000P, CFE-WH-PS1
		ENGINEER APPROVAL R MICHNOFF	11/22/99	POWER SUPPLY PSWTH1/PSWTV2
		SUPVR. APPROVAL		SIZE D — 94028821 — REV A
	NA / BREAK SHARP EDGES	NEXT ASSEMBLY		DRAWING NUMBER
OUTSTANDING ECN	FINISH	MAX XX MIN XX		MATERIAL ——— SCALE NA WEIGHT: – SHEET 14 OF 32

*AUTOCAD

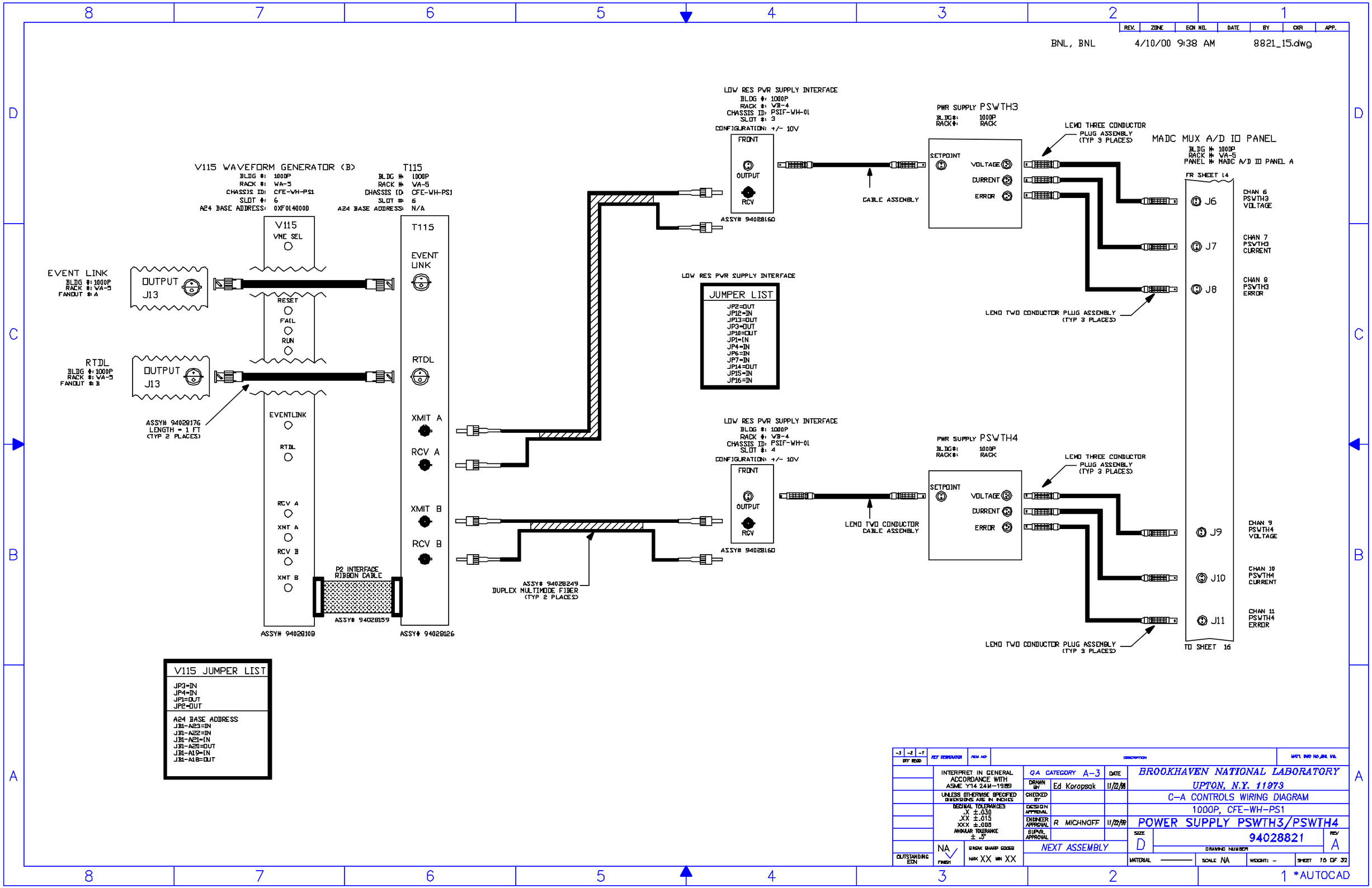

BNL, BNL 4/10/00 9:38 AM 8821_15.dwg
REV. ZONE ECN NO. DATE BY CKR APP.
V115 WAVEFORM GENERATOR (B)
BLDG #: 1000P
RACK #: WA-5
CHASSIS ID: CFE-WH-PS1
SLOT #: 6
A24 BASE ADDRESS: 0XF0140000
T115
BLDG #: 1000P
RACK #: WA-5
CHASSIS ID: CFE-WH-PS1
SLOT #: 6
A24 BASE ADDRESS: N/A
V115
VME SEL
RESET
FAIL
RUN
EVENTLINK
RTDL
RCV A
XMT A
RCV B
XMT B
EVENT LINK
BLDG #: 1000P
RACK #: WA-5
FANOUT #: A
OUTPUT
J13
RTDL
BLDG #: 1000P
RACK #: WA-5
FANOUT #: B
OUTPUT
J13
ASSY# 94028176
LENGTH = 1 FT
(TYP 2 PLACES)
P2 INTERFACE
RIBBON CABLE
ASSY# 94028159
ASSY# 94028108
ASSY# 94028126
T115
EVENT LINK
RTDL
XMIT A
RCV A
XMIT B
RCV B
LOW RES PWR SUPPLY INTERFACE
BLDG #: 1000P
RACK #: WB-4
CHASSIS ID: PSIF-WH-01
SLOT #: 3
CONFIGURATION: +/- 10V
FRONT
OUTPUT
RCV
ASSY# 94028160
CABLE ASSEMBLY
PWR SUPPLY PSWTH3
BLDG#: 1000P
RACK#: RACK
SETPOINT
VOLTAGE
CURRENT
ERROR
LEMO THREE CONDUCTOR
PLUG ASSEMBLY
(TYP 3 PLACES)
MADC MUX A/D IO PANEL
BLDG #: 1000P
RACK #: WA-5
PANEL #: MADC A/D IO PANEL A
FR SHEET 14
J6
CHAN 6
PSWTH3
VOLTAGE
J7
CHAN 7
PSWTH3
CURRENT
J8
CHAN 8
PSWTH3
ERROR
LEMO TWO CONDUCTOR PLUG ASSEMBLY
(TYP 3 PLACES)
LOW RES PWR SUPPLY INTERFACE
JUMPER LIST
JP2=OUT
JP12=IN
JP13=OUT
JP3=OUT
JP10=OUT
JP1=IN
JP4=IN
JP6=IN
JP7=IN
JP14=OUT
JP15=IN
JP16=IN
LOW RES PWR SUPPLY INTERFACE
BLDG #: 1000P
RACK #: WB-4
CHASSIS ID: PSIF-WH-01
SLOT #: 4
CONFIGURATION: +/- 10V
FRONT
OUTPUT
RCV
ASSY# 94028160
LEMO TWO CONDUCTOR
CABLE ASSEMBLY
PWR SUPPLY PSWTH4
BLDG#: 1000P
RACK#: RACK
SETPOINT
VOLTAGE
CURRENT
ERROR
LEMO THREE CONDUCTOR
PLUG ASSEMBLY
(TYP 3 PLACES)
J9
CHAN 9
PSWTH4
VOLTAGE
J10
CHAN 10
PSWTH4
CURRENT
J11
CHAN 11
PSWTH4
ERROR
LEMO TWO CONDUCTOR PLUG ASSEMBLY
(TYP 3 PLACES)
TO SHEET 16
ASSY# 94028249
DUPLEX MULTIMODE FIBER
(TYP 2 PLACES)
V115 JUMPER LIST
JP3=IN
JP4=IN
JP1=OUT
JP2=OUT
A24 BASE ADDRESS
JB1-A23=IN
JB1-A22=IN
JB1-A21=IN
JB1-A20=OUT
JB1-A19=IN
JB1-A18=OUT
-3 -2 -1
QTY REQD
REF DESIGNATOR
ITEM NO
DESCRIPTION
MAT'L BAR NO/SNL VIA
INTERPRET IN GENERAL ACCORDANCE WITH ASME Y14 24M-1989
UNLESS OTHERWISE SPECIFIED DIMENSIONS ARE IN INCHES
DECIMAL TOLERANCES
.X ±.030
.XX ±.015
.XXX ±.005
ANGULAR TOLERANCE ± .5°
OUTSTANDING ECN
NA
FINISH
BREAK SHARP EDGES
MAX XX MIN XX
QA CATEGORY A-3
DATE
DRAWN BY Ed Koropsak 11/22/99
CHECKED BY
DESIGN APPROVAL
ENGINEER APPROVAL R MICHNOFF 11/22/99
SUPVR. APPROVAL
NEXT ASSEMBLY
BROOKHAVEN NATIONAL LABORATORY
UPTON, N.Y. 11973
C-A CONTROLS WIRING DIAGRAM
1000P, CFE-WH-PS1
POWER SUPPLY PSWTH3/PSWTH4
SIZE D
94028821
REV A
DRAWING NUMBER
MATERIAL
SCALE NA
WEIGHT: -
SHEET 16 OF 32
1 *AUTOCAD

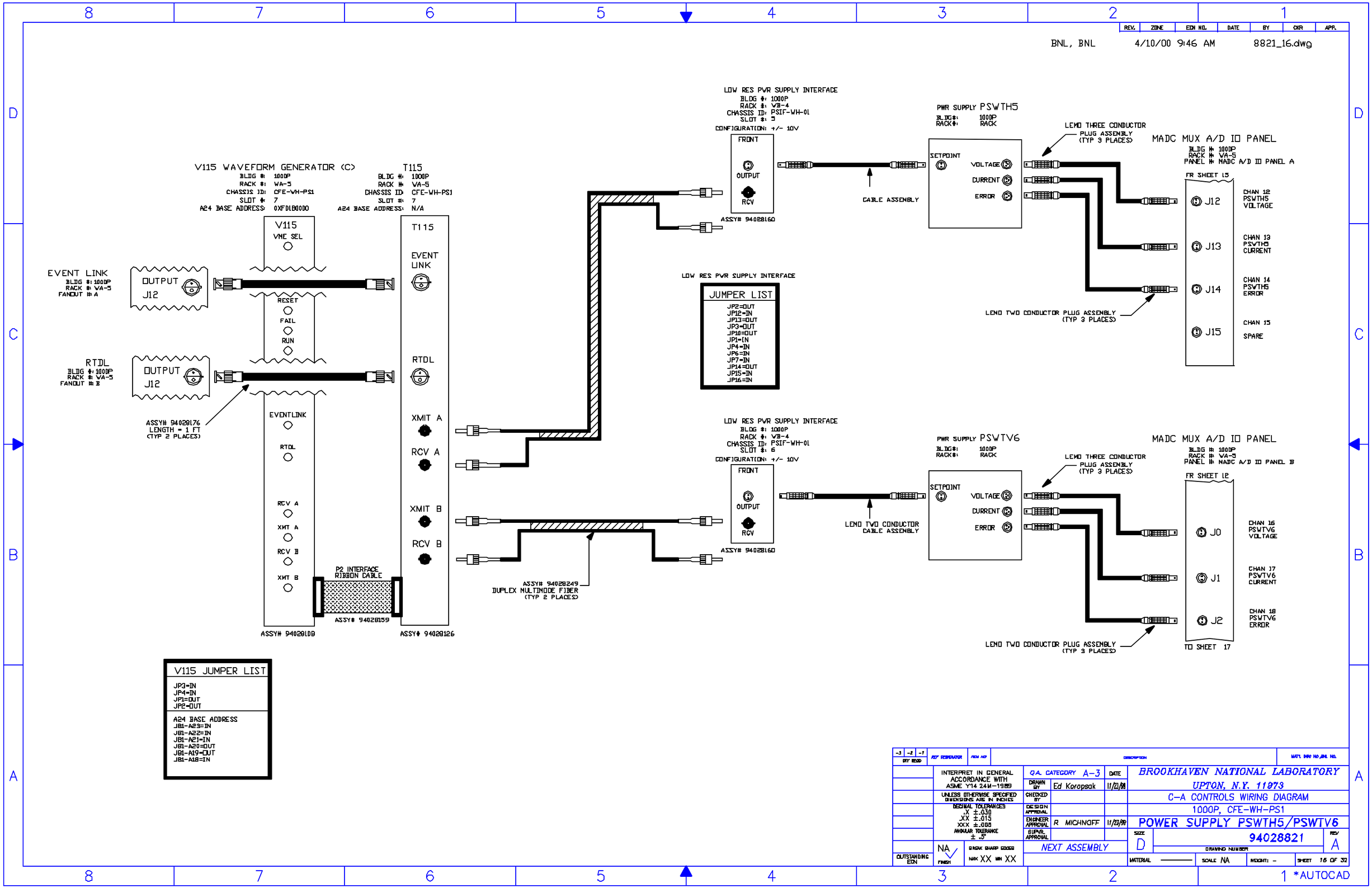

BNL, BNL 4/10/00 9:46 AM 8821_16.dwg
REV. ZONE ECN NO. DATE BY CKR APP.
V115 WAVEFORM GENERATOR (C)
BLDG #: 1000P
RACK #: WA-5
CHASSIS ID: CFE-WH-PS1
SLOT #: 7
A24 BASE ADDRESS: 0XF01B0000
T115
BLDG #: 1000P
RACK #: WA-5
CHASSIS ID: CFE-WH-PS1
SLOT #: 7
A24 BASE ADDRESS: N/A
V115
VME SEL
RESET
FAIL
RUN
EVENTLINK
RTDL
RCV A
XMIT A
RCV B
XMIT B
T115
EVENT LINK
RTDL
XMIT A
RCV A
XMIT B
RCV B
EVENT LINK
BLDG #: 1000P
RACK #: WA-5
FANOUT #: A
OUTPUT
J12
RTDL
BLDG #: 1000P
RACK #: WA-5
FANOUT #: B
OUTPUT
J12
ASSY# 94028176
LENGTH = 1 FT
(TYP 2 PLACES)
P2 INTERFACE
RIBBON CABLE
ASSY# 94028159
ASSY# 94028108
ASSY# 94028126
LOW RES PWR SUPPLY INTERFACE
BLDG #: 1000P
RACK #: WB-4
CHASSIS ID: PSIF-WH-01
SLOT #: 5
CONFIGURATION: +/- 10V
FRONT
OUTPUT
RCV
ASSY# 94028160
CABLE ASSEMBLY
PWR SUPPLY PSWTH5
BLDG#: 1000P
RACK#: RACK
SETPOINT
VOLTAGE
CURRENT
ERROR
LEMO THREE CONDUCTOR
PLUG ASSEMBLY
(TYP 3 PLACES)
MADC MUX A/D IO PANEL
BLDG #: 1000P
RACK #: WA-5
PANEL #: MADC A/D IO PANEL A
FR SHEET 15
J12
CHAN 12
PSWTH5
VOLTAGE
J13
CHAN 13
PSWTH5
CURRENT
J14
CHAN 14
PSWTH5
ERROR
J15
CHAN 15
SPARE
LEMO TWO CONDUCTOR PLUG ASSEMBLY
(TYP 3 PLACES)
LOW RES PWR SUPPLY INTERFACE
JUMPER LIST
JP2=OUT
JP12=IN
JP13=OUT
JP3=OUT
JP10=OUT
JP1=IN
JP4=IN
JP6=IN
JP7=IN
JP14=OUT
JP15=IN
JP16=IN
LOW RES PWR SUPPLY INTERFACE
BLDG #: 1000P
RACK #: WB-4
CHASSIS ID: PSIF-WH-01
SLOT #: 6
CONFIGURATION: +/- 10V
FRONT
OUTPUT
RCV
ASSY# 94028160
ASSY# 94028249
DUPLEX MULTIMODE FIBER
(TYP 2 PLACES)
LEMO TWO CONDUCTOR
CABLE ASSEMBLY
PWR SUPPLY PSWTV6
BLDG#: 1000P
RACK#: RACK
SETPOINT
VOLTAGE
CURRENT
ERROR
LEMO THREE CONDUCTOR
PLUG ASSEMBLY
(TYP 3 PLACES)
MADC MUX A/D IO PANEL
BLDG #: 1000P
RACK #: WA-5
PANEL #: MADC A/D IO PANEL B
FR SHEET 12
J0
CHAN 16
PSWTV6
VOLTAGE
J1
CHAN 17
PSWTV6
CURRENT
J2
CHAN 18
PSWTV6
ERROR
TO SHEET 17
LEMO TWO CONDUCTOR PLUG ASSEMBLY
(TYP 3 PLACES)
V115 JUMPER LIST
JP3=IN
JP4=IN
JP1=OUT
JP2=OUT
A24 BASE ADDRESS
JB1-A23=IN
JB1-A22=IN
JB1-A21=IN
JB1-A20=OUT
JB1-A19=OUT
JB1-A18=IN
-3 -2 -1
DIT REQD
REF DESIGNATOR
ITEM NO
DESCRIPTION
MAT'L DWG NO./INL NO.
INTERPRET IN GENERAL ACCORDANCE WITH ASME Y14 24M-1989
UNLESS OTHERWISE SPECIFIED DIMENSIONS ARE IN INCHES
DECIMAL TOLERANCES
.X ±.030
.XX ±.015
.XXX ±.005
ANGULAR TOLERANCE ± .5°
NA
FINISH
BREAK SHARP EDGES
MAX XX MIN XX
OUTSTANDING ECN
Q.A. CATEGORY A-3
DATE
DRAWN BY Ed Koropsak 11/23/99
CHECKED BY
DESIGN APPROVAL
ENGINEER APPROVAL R MICHNOFF 11/23/99
SUPVR. APPROVAL
NEXT ASSEMBLY
BROOKHAVEN NATIONAL LABORATORY
UPTON, N.Y. 11973
C-A CONTROLS WIRING DIAGRAM
1000P, CFE-WH-PS1
POWER SUPPLY PSWTH5/PSWTV6
SIZE D
94028821
REV A
DRAWING NUMBER
MATERIAL
SCALE NA
WEIGHT: -
SHEET 16 OF 32
1 *AUTOCAD

BNL, BNL 4/10/00 9:46 AM 8821_17.dwg

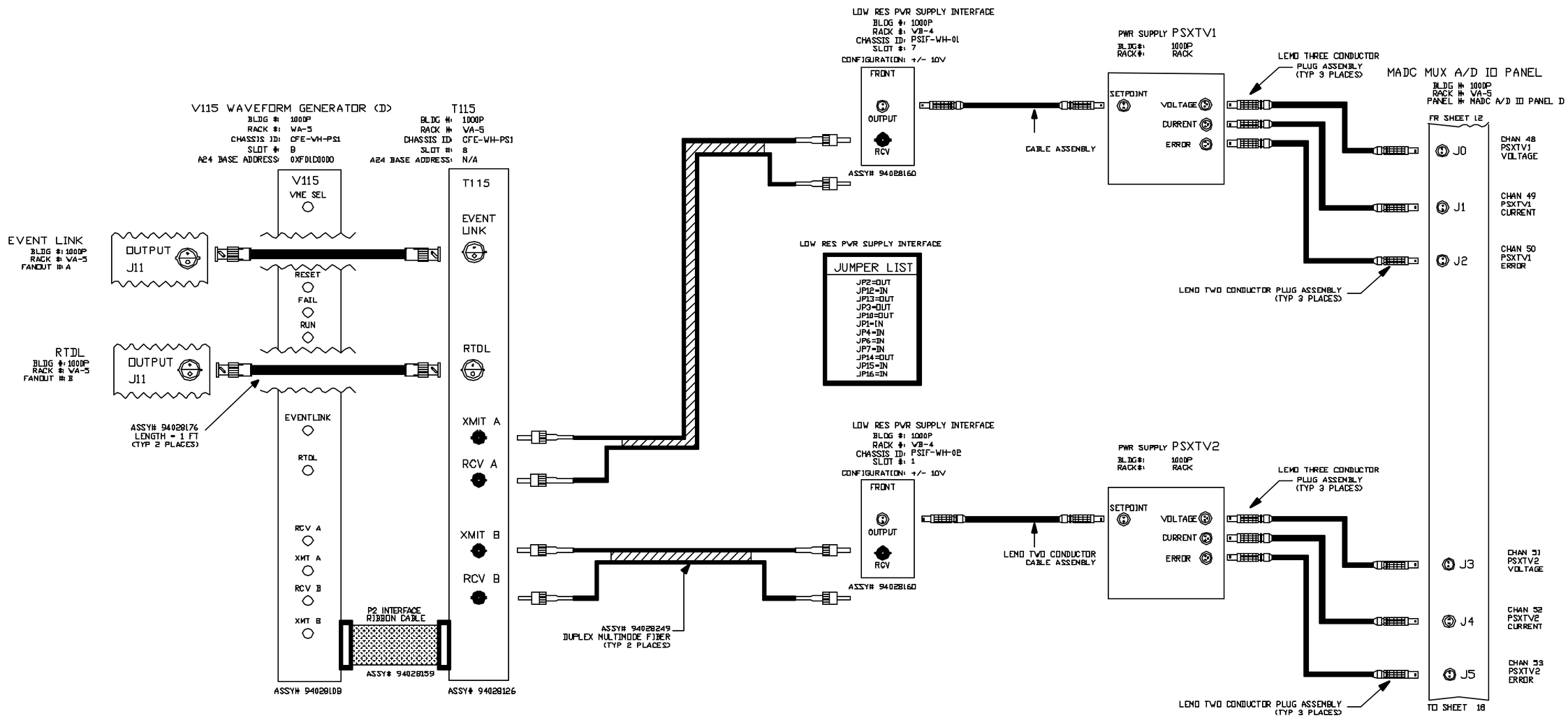

REV.	ZONE	ECN NO.	DATE	BY	CKR	APP.

-3 -2 -1 QTY REQD	REF DESIGNATOR	ITEM NO	DESCRIPTION	MAT'L IMM NO/BNL NO.

INTERPRET IN GENERAL ACCORDANCE WITH ASME Y14.24M-1989

UNLESS OTHERWISE SPECIFIED DIMENSIONS ARE IN INCHES

DECIMAL TOLERANCES
.X ±.030
.XX ±.015
.XXX ±.005
ANGULAR TOLERANCE ± .5°

OUTSTANDING ECN — NA — FINISH — BREAK SHARP EDGES MAX XX MIN XX

Q.A. CATEGORY A-3		DATE
DRAWN BY	Ed Koropsak	11/21/99
CHECKED BY		
DESIGN APPROVAL		
ENGINEER APPROVAL	R MICHNOFF	11/23/99
SUPVR. APPROVAL		

NEXT ASSEMBLY

BROOKHAVEN NATIONAL LABORATORY
UPTON, N.Y. 11973

C-A CONTROLS WIRING DIAGRAM
1000P, CFE-WH-PS1

POWER SUPPLY PSXTV1/PSXTV2

SIZE D — 94028821 — REV A

DRAWING NUMBER

MATERIAL — SCALE NA — WEIGHT: — SHEET 17 OF 32

1 *AUTOCAD

REV.	ZONE	ECN NO.	DATE	BY	CKR	APP.

BNL, BNL 4/10/00 9:47 AM 8821_18.dwg

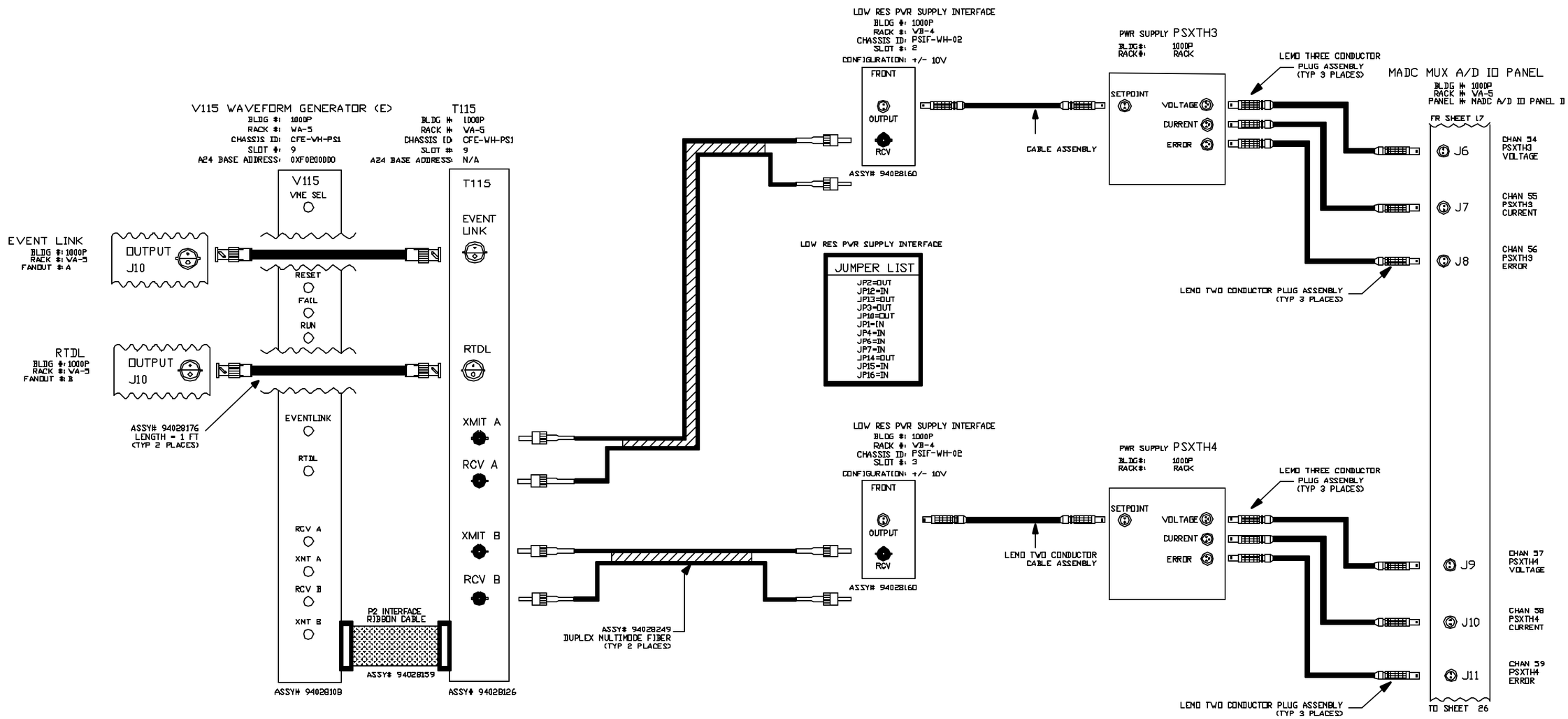

V115 JUMPER LIST
JP3=IN JP4=IN JP1=OUT JP2=OUT
A24 BASE ADDRESS JB1-A23=IN JB1-A22=IN JB1-A21=OUT JB1-A20=IN JB1-A19=IN JB1-A18=IN

-3	-2	-1	REF DESIGNATOR	ECN NO	DESCRIPTION	MAT'L SPEC NO./INS. MFG.
DATE ECAD						

	INTERPRET IN GENERAL ACCORDANCE WITH ASME Y14 24M-1989	QA CATEGORY A-3	DATE	BROOKHAVEN NATIONAL LABORATORY
		DRAWN BY Ed Koropsak	11/21/98	UPTON, N.Y. 11973
	UNLESS OTHERWISE SPECIFIED DIMENSIONS ARE IN INCHES	CHECKED BY		C-A CONTROLS WIRING DIAGRAM
	DECIMAL TOLERANCES .X ±.030 .XX ±.015 .XXX ±.008 ANGULAR TOLERANCE ± .5°	DESIGN APPROVAL		1000P, CFE-WH-PS1
		ENGINEER APPROVAL R MICHNOFF	11/23/99	POWER SUPPLY PSXTH3/PSXTH4
		SUPVR. APPROVAL		SIZE D — 94028821 — REV A
OUTSTANDING ECN	NA ✓ FINISH	BREAK SHARP EDGES MAX XX MIN XX	NEXT ASSEMBLY	DRAWING NUMBER
				MATERIAL ——— SCALE NA WEIGHT: – SHEET 18 OF 32

1 *AUTOCAD

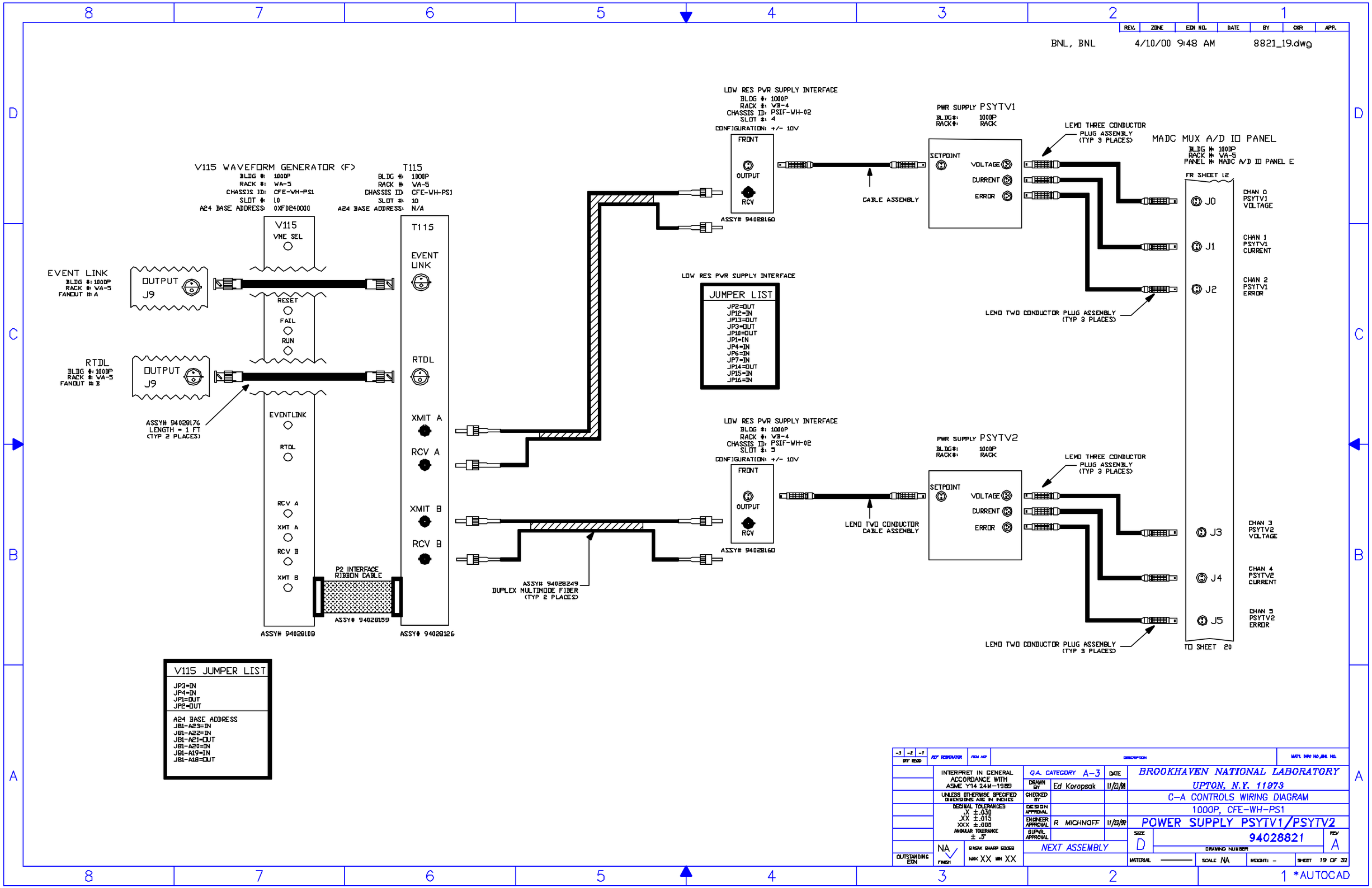

BNL, BNL 4/10/00 9:48 AM 8821_19.dwg
V115 WAVEFORM GENERATOR (F)
BLDG #: 1000P
RACK #: WA-5
CHASSIS ID: CFE-WH-PS1
SLOT #: 10
A24 BASE ADDRESS: 0XFD240000
T115
BLDG #: 1000P
RACK #: WA-5
CHASSIS ID: CFE-WH-PS1
SLOT #: 10
A24 BASE ADDRESS: N/A
V115
VME SEL
RESET
FAIL
RUN
EVENTLINK
RTDL
RCV A
XMIT A
RCV B
XMIT B
EVENT LINK
BLDG #: 1000P
RACK #: WA-5
FANOUT #: A
OUTPUT
J9
RTDL
BLDG #: 1000P
RACK #: WA-5
FANOUT #: B
OUTPUT
J9
ASSY# 94028176
LENGTH = 1 FT
(TYP 2 PLACES)
P2 INTERFACE
RIBBON CABLE
ASSY# 94028159
ASSY# 94028108
ASSY# 94028126
T115
EVENT LINK
RTDL
XMIT A
RCV A
XMIT B
RCV B
LOW RES PWR SUPPLY INTERFACE
BLDG #: 1000P
RACK #: WB-4
CHASSIS ID: PSIF-WH-02
SLOT #: 4
CONFIGURATION: +/- 10V
FRONT
OUTPUT
RCV
ASSY# 94028160
CABLE ASSEMBLY
PWR SUPPLY PSYTV1
BLDG#: 1000P
RACK#: RACK
SETPOINT
VOLTAGE
CURRENT
ERROR
LEMO THREE CONDUCTOR
PLUG ASSEMBLY
(TYP 3 PLACES)
MADC MUX A/D IO PANEL
BLDG #: 1000P
RACK #: WA-5
PANEL #: MADC A/D IO PANEL E
FR SHEET 12
J0
CHAN 0
PSYTV1
VOLTAGE
J1
CHAN 1
PSYTV1
CURRENT
J2
CHAN 2
PSYTV1
ERROR
LEMO TWO CONDUCTOR PLUG ASSEMBLY
(TYP 3 PLACES)
LOW RES PWR SUPPLY INTERFACE
JUMPER LIST
JP2=OUT
JP12=IN
JP13=OUT
JP3=OUT
JP10=OUT
JP1=IN
JP4=IN
JP6=IN
JP7=IN
JP14=OUT
JP15=IN
JP16=IN
LOW RES PWR SUPPLY INTERFACE
BLDG #: 1000P
RACK #: WB-4
CHASSIS ID: PSIF-WH-02
SLOT #: 5
CONFIGURATION: +/- 10V
FRONT
OUTPUT
RCV
ASSY# 94028160
ASSY# 94028249
DUPLEX MULTIMODE FIBER
(TYP 2 PLACES)
LEMO TWO CONDUCTOR
CABLE ASSEMBLY
PWR SUPPLY PSYTV2
BLDG#: 1000P
RACK#: RACK
SETPOINT
VOLTAGE
CURRENT
ERROR
LEMO THREE CONDUCTOR
PLUG ASSEMBLY
(TYP 3 PLACES)
J3
CHAN 3
PSYTV2
VOLTAGE
J4
CHAN 4
PSYTV2
CURRENT
J5
CHAN 5
PSYTV2
ERROR
LEMO TWO CONDUCTOR PLUG ASSEMBLY
(TYP 3 PLACES)
TO SHEET 20
V115 JUMPER LIST
JP3=IN
JP4=IN
JP1=OUT
JP2=OUT
A24 BASE ADDRESS
JB1-A23=IN
JB1-A22=IN
JB1-A21=OUT
JB1-A20=IN
JB1-A19=IN
JB1-A18=OUT
INTERPRET IN GENERAL ACCORDANCE WITH ASME Y14.24M-1989
UNLESS OTHERWISE SPECIFIED DIMENSIONS ARE IN INCHES
DECIMAL TOLERANCES
.X ±.030
.XX ±.015
.XXX ±.005
ANGULAR TOLERANCE ± .5°
NA
FINISH
BREAK SHARP EDGES
MAX XX MIN XX
OUTSTANDING ECN
Q.A. CATEGORY A-3
DATE
DRAWN BY Ed Koropsak 11/21/99
CHECKED BY
DESIGN APPROVAL
ENGINEER APPROVAL R MICHNOFF 11/23/99
SUPVR. APPROVAL
NEXT ASSEMBLY
BROOKHAVEN NATIONAL LABORATORY
UPTON, N.Y. 11973
C-A CONTROLS WIRING DIAGRAM
1000P, CFE-WH-PS1
POWER SUPPLY PSYTV1/PSYTV2
SIZE D
94028821
REV A
DRAWING NUMBER
MATERIAL
SCALE NA
WEIGHT: -
SHEET 19 OF 32
*AUTOCAD

REV.	ZONE	ECN NO.	DATE	BY	CKR	APP.

BNL, BNL 4/10/00 9:49 AM 8821_20.dwg

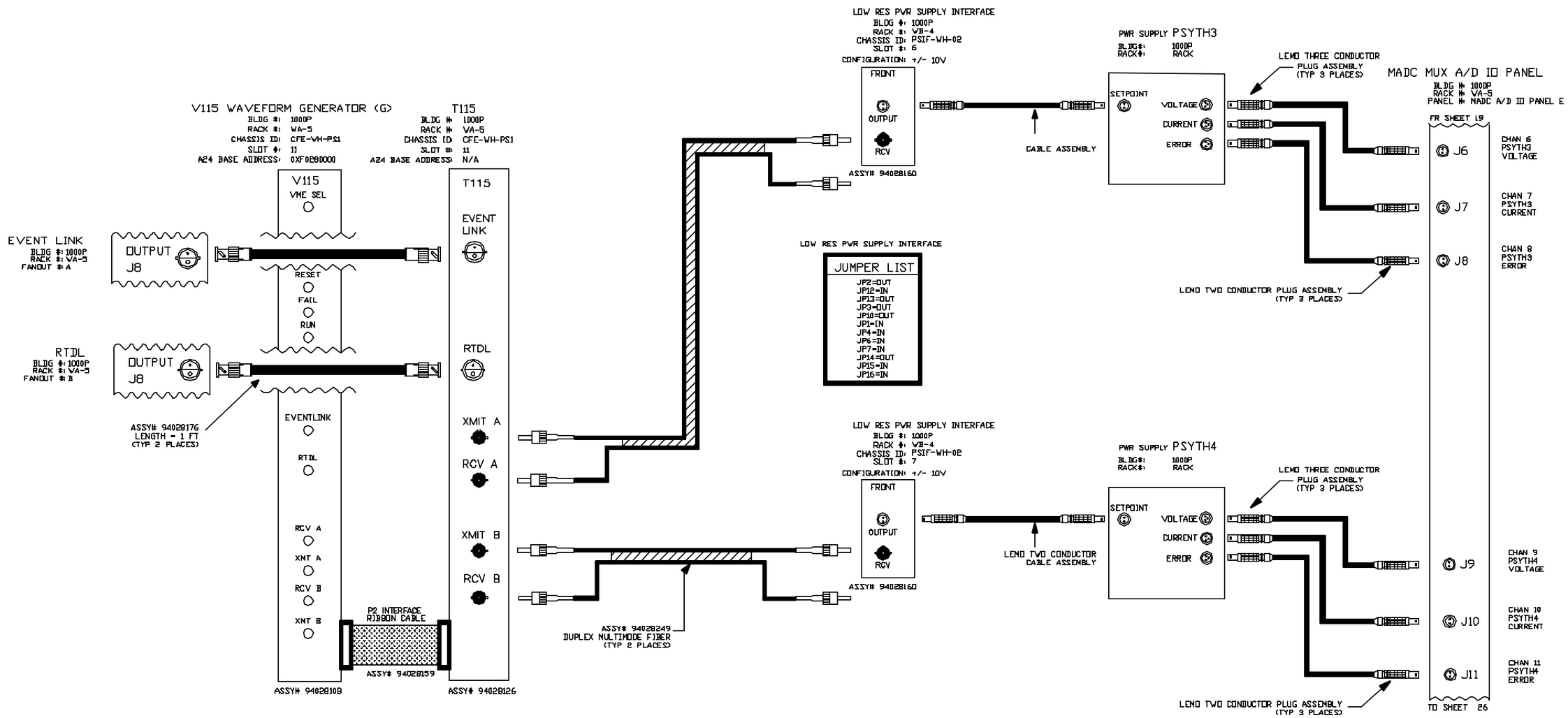

V115 JUMPER LIST
JP3=IN JP4=IN JP1=OUT JP2=OUT
A24 BASE ADDRESS JB1-A23=IN JB1-A22=IN JB1-A21=OUT JB1-A20=IN JB1-A19=OUT JB1-A18=IN

-3	-2	-1	REF DESIGNATOR	FROM ACP	DESCRIPTION	MAT'L IND NO./INL VIS.
DIT REQD						

INTERPRET IN GENERAL ACCORDANCE WITH ASME Y14 24M-1989	QA CATEGORY A-3	DATE	BROOKHAVEN NATIONAL LABORATORY
	DRAWN BY Ed Koropsak	11/21/98	UPTON, N.Y. 11973
UNLESS OTHERWISE SPECIFIED DIMENSIONS ARE IN INCHES	CHECKED BY		C-A CONTROLS WIRING DIAGRAM
DECIMAL TOLERANCES .X ±.030 .XX ±.015 .XXX ±.008 ANGULAR TOLERANCE ± .5°	DESIGN APPROVAL		1000P, CFE-WH-PS1
	ENGINEER APPROVAL R MICHNOFF	11/23/99	POWER SUPPLY PSYTH3/PSYTH4
	SUPVR. APPROVAL		SIZE D — DRAWING NUMBER 94028821 — REV A
OUTSTANDING ECN	NA FINISH	BREAK SHARP EDGES MAX XX MIN XX	NEXT ASSEMBLY
			MATERIAL ——— SCALE NA WEIGHT: – SHEET 20 OF 32

*AUTOCAD

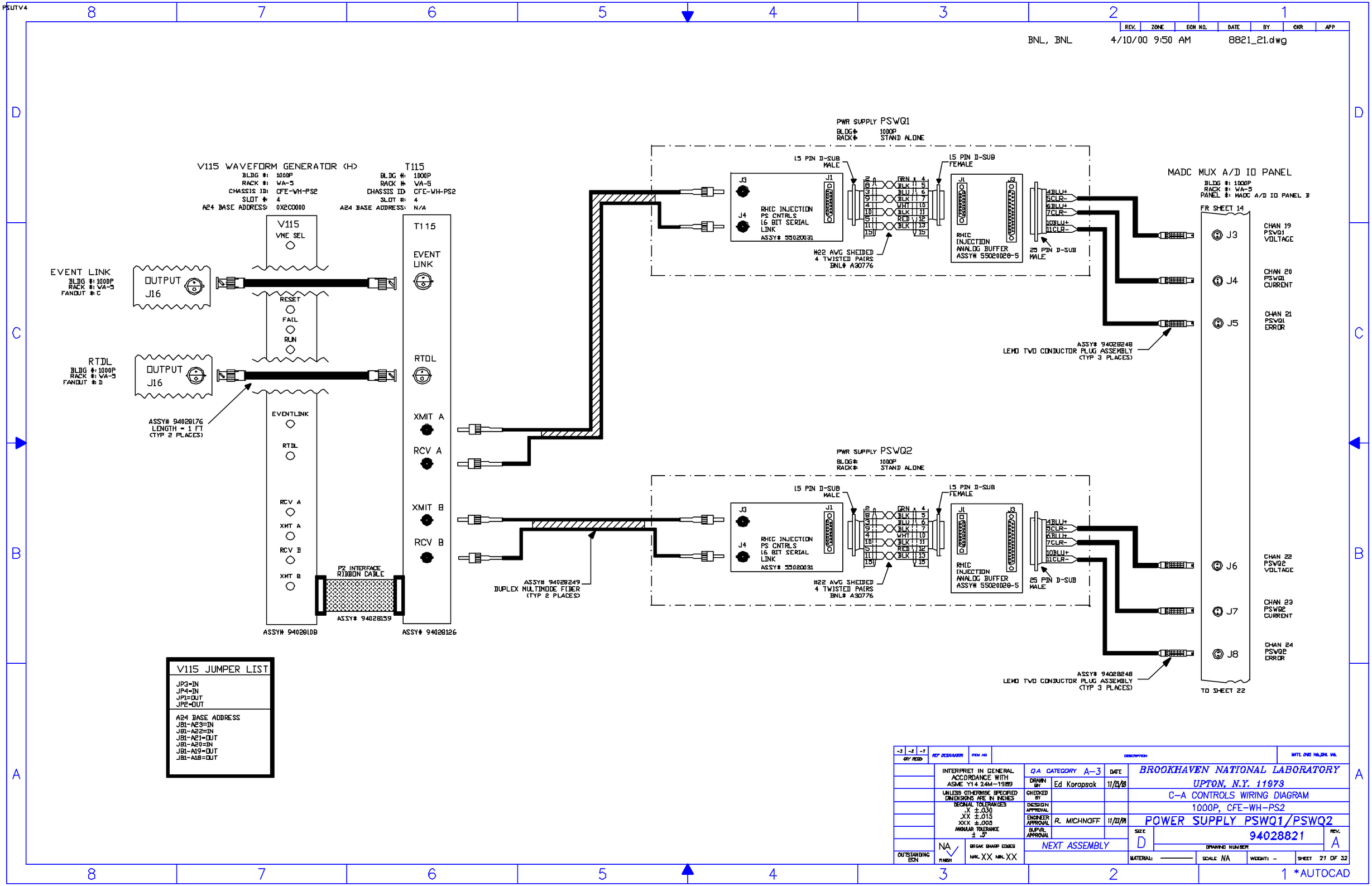

BNL, BNL 4/10/00 9:50 AM 8821_21.dwg
V115 WAVEFORM GENERATOR (H)
BLDG #: 1000P
RACK #: WA-5
CHASSIS ID: CFE-WH-PS2
SLOT #: 4
A24 BASE ADDRESS: 0X2C0000
T115
BLDG #: 1000P
RACK #: WA-5
CHASSIS ID: CFE-WH-PS2
SLOT #: 4
A24 BASE ADDRESS: N/A
V115
VME SEL
RESET
FAIL
RUN
EVENTLINK
RTDL
RCV A
XMIT A
RCV B
XMIT B
P2 INTERFACE RIBBON CABLE
ASSY# 94028159
ASSY# 94028108
ASSY# 94028126
EVENT LINK
BLDG #: 1000P
RACK #: WA-5
FANOUT #: C
OUTPUT J16
RTDL
BLDG #: 1000P
RACK #: WA-5
FANOUT #: D
OUTPUT J16
ASSY# 94028176
LENGTH = 1 FT
(TYP 2 PLACES)
T115
EVENT LINK
RTDL
XMIT A
RCV A
XMIT B
RCV B
PWR SUPPLY PSWQ1
BLDG#: 1000P
RACK#: STAND ALONE
15 PIN D-SUB MALE
15 PIN D-SUB FEMALE
J3
J4
J1
RHIC INJECTION PS CNTRLS 16 BIT SERIAL LINK
ASSY# 55020031
#22 AVG SHEIDED 4 TWISTED PAIRS
BNL# A30776
RHIC INJECTION ANALOG BUFFER
ASSY# 55020028-5
25 PIN D-SUB MALE
4BLU+
5CLR-
6BLU+
7CLR-
10BLU+
11CLR-
ASSY# 94028249
DUPLEX MULTIMODE FIBER
(TYP 2 PLACES)
PWR SUPPLY PSWQ2
BLDG#: 1000P
RACK#: STAND ALONE
MADC MUX A/D IO PANEL
BLDG #: 1000P
RACK #: WA-5
PANEL #: MADC A/D IO PANEL B
FR SHEET 14
J3
J4
J5
J6
J7
J8
CHAN 19 PSWQ1 VOLTAGE
CHAN 20 PSWQ1 CURRENT
CHAN 21 PSWQ1 ERROR
CHAN 22 PSWQ2 VOLTAGE
CHAN 23 PSWQ2 CURRENT
CHAN 24 PSWQ2 ERROR
ASSY# 94028248
LEMO TWO CONDUCTOR PLUG ASSEMBLY
(TYP 3 PLACES)
TO SHEET 22
V115 JUMPER LIST
JP3=IN
JP4=IN
JP1=OUT
JP2=OUT
A24 BASE ADDRESS
JB1-A23=IN
JB1-A22=IN
JB1-A21=OUT
JB1-A20=IN
JB1-A19=OUT
JB1-A18=OUT
INTERPRET IN GENERAL ACCORDANCE WITH ASME Y14 24M-1989
UNLESS OTHERWISE SPECIFIED DIMENSIONS ARE IN INCHES
DECIMAL TOLERANCES .X ±.030 .XX ±.015 .XXX ±.005
ANGULAR TOLERANCE ± .5°
QA CATEGORY A-3
DRAWN BY Ed Koropsak 11/23/99
CHECKED BY
DESIGN APPROVAL
ENGINEER APPROVAL R. MICHNOFF 11/23/99
SUPVR. APPROVAL
NEXT ASSEMBLY
BROOKHAVEN NATIONAL LABORATORY
UPTON, N.Y. 11973
C-A CONTROLS WIRING DIAGRAM
1000P, CFE-WH-PS2
POWER SUPPLY PSWQ1/PSWQ2
SIZE D
94028821
REV. A
DRAWING NUMBER
MATERIAL:
SCALE NA
WEIGHT: -
SHEET 21 OF 32
OUTSTANDING ECN
NA
FINISH
BREAK SHARP EDGES
MAX. XX MIN. XX
*AUTOCAD

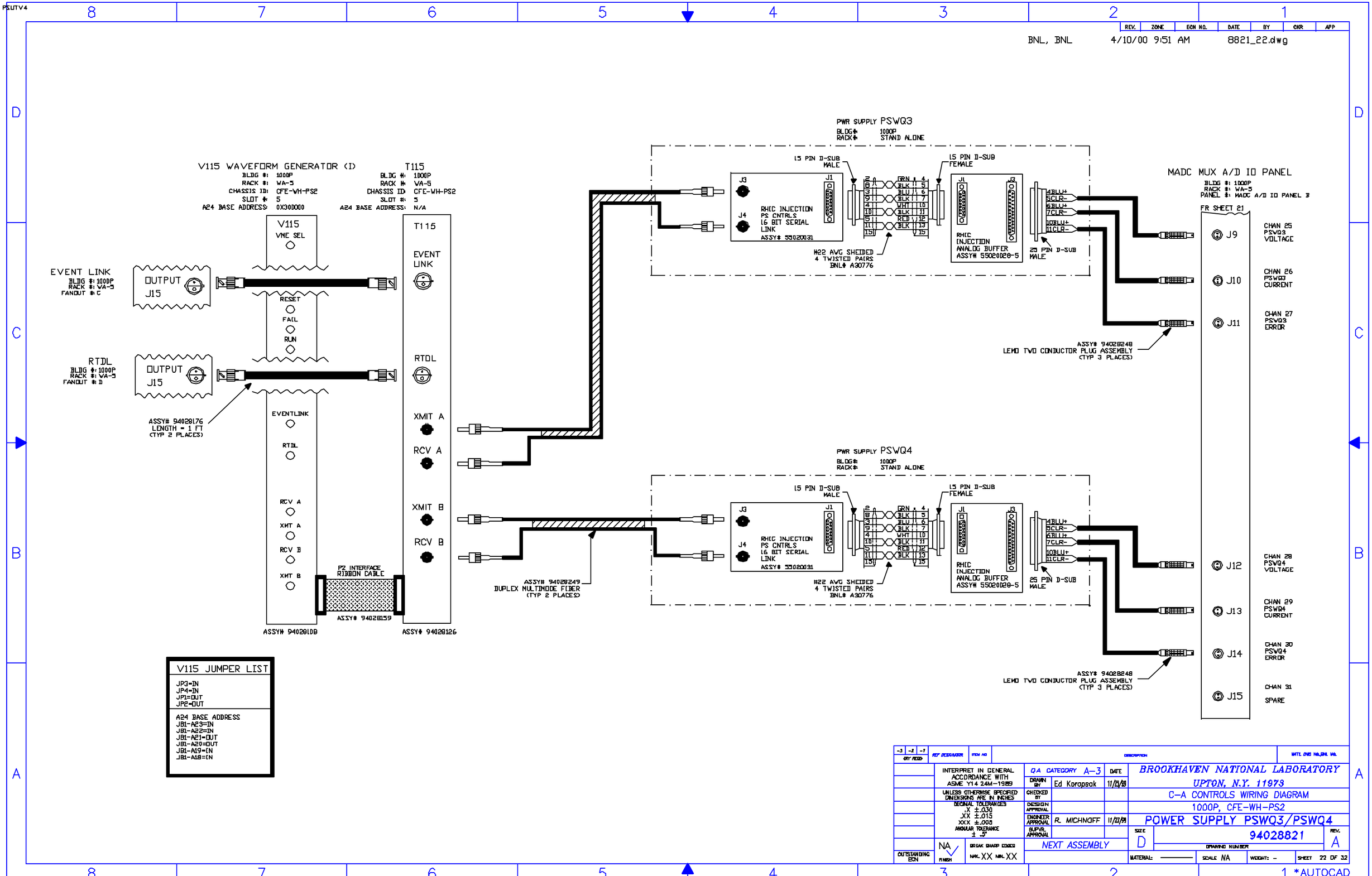

BNL, BNL 4/10/00 9:51 AM 8821_22.dwg
V115 WAVEFORM GENERATOR (I)
BLDG #: 1000P
RACK #: WA-5
CHASSIS ID: CFE-WH-PS2
SLOT #: 5
A24 BASE ADDRESS: 0X300000
T115
BLDG #: 1000P
RACK #: VA-5
CHASSIS ID: CFE-WH-PS2
SLOT #: 5
A24 BASE ADDRESS: N/A
V115
VME SEL
RESET
FAIL
RUN
EVENTLINK
RTDL
RCV A
XMIT A
RCV B
XMIT B
P2 INTERFACE RIBBON CABLE
ASSY# 94028159
ASSY# 94028108
ASSY# 94028126
EVENT LINK
BLDG #: 1000P
RACK #: VA-5
FANOUT #: C
OUTPUT J15
RTDL
BLDG #: 1000P
RACK #: VA-5
FANOUT #: D
OUTPUT J15
ASSY# 94028176
LENGTH = 1 FT
(TYP 2 PLACES)
T115
EVENT LINK
RTDL
XMIT A
RCV A
XMIT B
RCV B
PWR SUPPLY PSWQ3
BLDG#: 1000P
RACK#: STAND ALONE
15 PIN D-SUB MALE
15 PIN D-SUB FEMALE
J3
J4
J1
RHIC INJECTION PS CNTRLS 16 BIT SERIAL LINK
ASSY# 55020031
#22 AVG SHEIDED 4 TWISTED PAIRS
BNL# A30776
RHIC INJECTION ANALOG BUFFER
ASSY# 55020028-5
25 PIN D-SUB MALE
ASSY# 94028249
DUPLEX MULTIMODE FIBER
(TYP 2 PLACES)
PWR SUPPLY PSWQ4
BLDG#: 1000P
RACK#: STAND ALONE
ASSY# 94028248
LEMO TWO CONDUCTOR PLUG ASSEMBLY
(TYP 3 PLACES)
MADC MUX A/D IO PANEL
BLDG #: 1000P
RACK #: WA-5
PANEL #: MADC A/D IO PANEL B
FR SHEET 21
J9
CHAN 25 PSWQ3 VOLTAGE
J10
CHAN 26 PSWQ3 CURRENT
J11
CHAN 27 PSWQ3 ERROR
J12
CHAN 28 PSWQ4 VOLTAGE
J13
CHAN 29 PSWQ4 CURRENT
J14
CHAN 30 PSWQ4 ERROR
J15
CHAN 31 SPARE
V115 JUMPER LIST
JP3=IN
JP4=IN
JP1=OUT
JP2=OUT
A24 BASE ADDRESS
JB1-A23=IN
JB1-A22=IN
JB1-A21=OUT
JB1-A20=OUT
JB1-A19=IN
JB1-A18=IN
INTERPRET IN GENERAL ACCORDANCE WITH ASME Y14 24M-1989
UNLESS OTHERWISE SPECIFIED DIMENSIONS ARE IN INCHES
DECIMAL TOLERANCES .X ±.030 .XX ±.015 .XXX ±.005
ANGULAR TOLERANCE ± .5°
QA CATEGORY A-3
DRAWN BY Ed Koropsak 11/23/99
CHECKED BY
DESIGN APPROVAL
ENGINEER APPROVAL R. MICHNOFF 11/23/99
SUPVR. APPROVAL
NEXT ASSEMBLY
BROOKHAVEN NATIONAL LABORATORY
UPTON, N.Y. 11973
C-A CONTROLS WIRING DIAGRAM
1000P, CFE-WH-PS2
POWER SUPPLY PSWQ3/PSWQ4
SIZE D
94028821
REV. A
DRAWING NUMBER
MATERIAL:
SCALE NA
WEIGHT: -
SHEET 22 OF 32
OUTSTANDING ECN
NA
FINISH
BREAK SHARP EDGES
MAX. XX MIN. XX
*AUTOCAD

PSUTV4

ACS, BNL 11/24/99 10:44 AM 8774_23.dwg

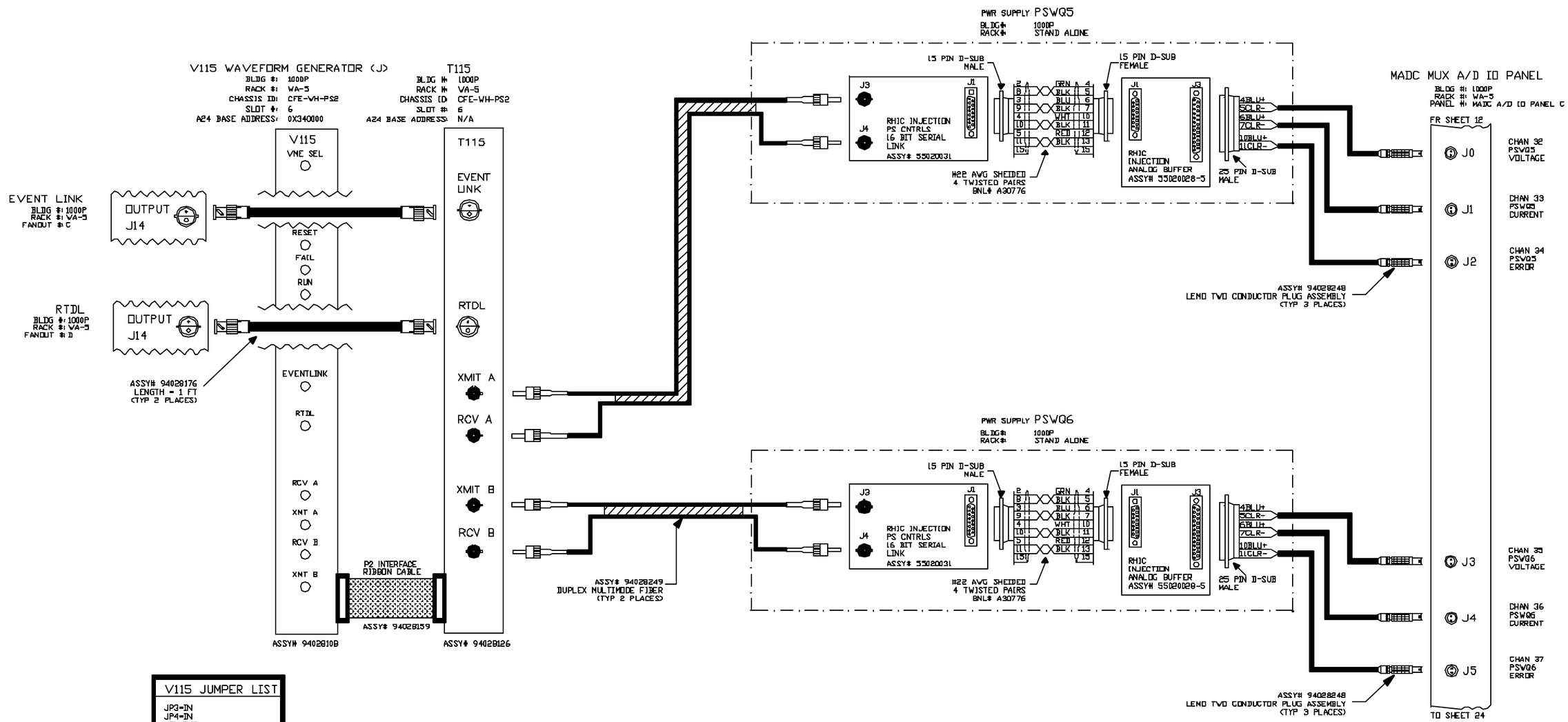

V115 JUMPER LIST
JP3=IN JP4=IN JP1=OUT JP2=OUT
A24 BASE ADDRESS JB1-A23=IN JB1-A22=IN JB1-A21=OUT JB1-A20=OUT JB1-A19=IN JB1-A18=OUT

REV.	ZONE	ECN NO.	DATE	BY	CKR	APP.

-3	-2	-1	REV REGENERATOR	NEW ASY	DESCRIPTION	WAT'L BAD NO.,BNL VOL.
DRT READ						

INTERPRET IN GENERAL ACCORDANCE WITH ASME Y14 24M-1989

UNLESS OTHERWISE SPECIFIED DIMENSIONS ARE IN INCHES

DECIMAL TOLERANCES
.X ±.030
.XX ±.015
.XXX ±.005
ANGULAR TOLERANCE ± .5°

BREAK SHARP EDGES MAX XX MIN XX

FINISH NA

OUTSTANDING ECN

QA CATEGORY A-3		DATE
DRAWN BY	Ed Koropsak	11/21/98
CHECKED BY		
DESIGN APPROVAL		
ENGINEER APPROVAL	R MICHNOFF	11/21/99
SUPVR. APPROVAL		

NEXT ASSEMBLY

BROOKHAVEN NATIONAL LABORATORY
UPTON, N.Y. 11973

C-A CONTROLS WIRING DIAGRAM

1000P, CFE-WH-PS2

POWER SUPPLY PSWQ5/PSWQ6

SIZE D — DRAWING NUMBER 94028821 — REV A

MATERIAL —— SCALE NA WEIGHT: – SHEET 23 OF 32

*AUTOCAD

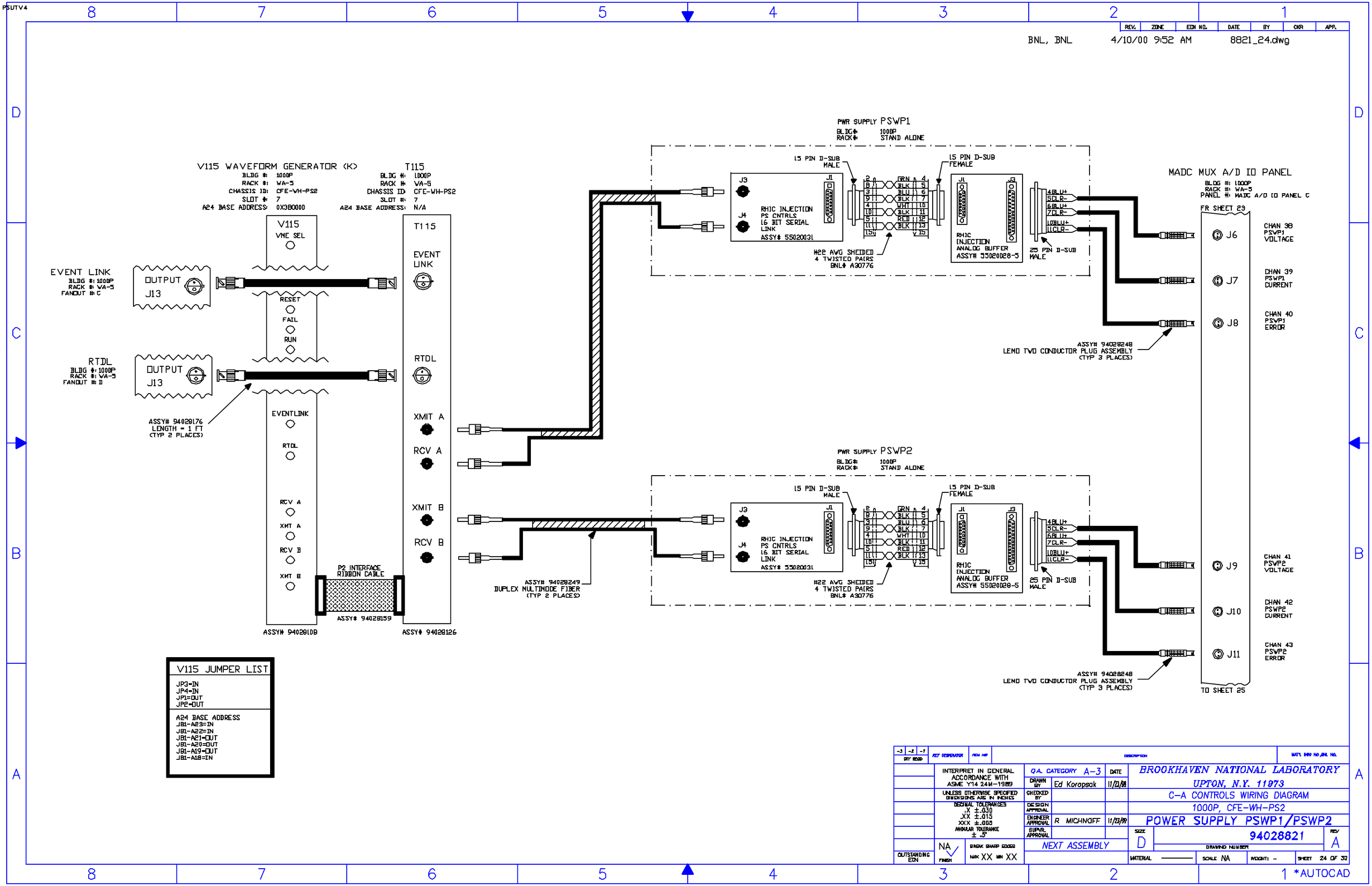

BNL, BNL 4/10/00 9:52 AM 8821_24.dwg
V115 WAVEFORM GENERATOR (K)
BLDG #: 1000P
RACK #: WA-5
CHASSIS ID: CFE-WH-PS2
SLOT #: 7
A24 BASE ADDRESS: 0X3B0000
T115
BLDG #: 1000P
RACK #: WA-5
CHASSIS ID: CFE-WH-PS2
SLOT #: 7
A24 BASE ADDRESS: N/A
EVENT LINK
BLDG #: 1000P
RACK #: WA-5
FANOUT #: C
OUTPUT J13
RTDL
BLDG #: 1000P
RACK #: WA-5
FANOUT #: D
OUTPUT J13
ASSY# 94028176
LENGTH = 1 FT
(TYP 2 PLACES)
V115
VME SEL
RESET
FAIL
RUN
EVENTLINK
RTDL
RCV A
XMT A
RCV B
XMT B
P2 INTERFACE RIBBON CABLE
ASSY# 94028159
ASSY# 94028108
T115
EVENT LINK
RTDL
XMIT A
RCV A
XMIT B
RCV B
ASSY# 94028126
PWR SUPPLY PSWP1
BLDG#: 1000P
RACK#: STAND ALONE
15 PIN D-SUB MALE
15 PIN D-SUB FEMALE
RHIC INJECTION PS CNTRLS 16 BIT SERIAL LINK
ASSY# 55020031
RHIC INJECTION ANALOG BUFFER
ASSY# 55020028-5
#22 AWG SHEIDED 4 TWISTED PAIRS
BNL# A30776
25 PIN D-SUB MALE
ASSY# 94028249
DUPLEX MULTIMODE FIBER
(TYP 2 PLACES)
PWR SUPPLY PSWP2
BLDG#: 1000P
RACK#: STAND ALONE
MADC MUX A/D IO PANEL
BLDG #: 1000P
RACK #: WA-5
PANEL #: MADC A/D IO PANEL C
FR SHEET 23
J6 CHAN 38 PSWP1 VOLTAGE
J7 CHAN 39 PSWP1 CURRENT
J8 CHAN 40 PSWP1 ERROR
J9 CHAN 41 PSWP2 VOLTAGE
J10 CHAN 42 PSWP2 CURRENT
J11 CHAN 43 PSWP2 ERROR
ASSY# 94028248
LEMO TWO CONDUCTOR PLUG ASSEMBLY
(TYP 3 PLACES)
TO SHEET 25
V115 JUMPER LIST
JP3=IN
JP4=IN
JP1=OUT
JP2=OUT
A24 BASE ADDRESS
JB1-A23=IN
JB1-A22=IN
JB1-A21=OUT
JB1-A20=OUT
JB1-A19=OUT
JB1-A18=IN
INTERPRET IN GENERAL ACCORDANCE WITH ASME Y14.24M-1989
UNLESS OTHERWISE SPECIFIED DIMENSIONS ARE IN INCHES
DECIMAL TOLERANCES .X ±.030 .XX ±.015 .XXX ±.005
ANGULAR TOLERANCE ± .5°
NA
BREAK SHARP EDGES
MAX XX MIN XX
OUTSTANDING ECN
Q.A. CATEGORY A-3
DRAWN BY Ed Koropsak 11/23/99
CHECKED BY
DESIGN APPROVAL
ENGINEER APPROVAL R MICHNOFF 11/23/99
SUPVR. APPROVAL
NEXT ASSEMBLY
BROOKHAVEN NATIONAL LABORATORY
UPTON, N.Y. 11973
C-A CONTROLS WIRING DIAGRAM
1000P, CFE-WH-PS2
POWER SUPPLY PSWP1/PSWP2
SIZE D
94028821
REV A
DRAWING NUMBER
MATERIAL
SCALE NA
WEIGHT: -
SHEET 24 OF 32
*AUTOCAD

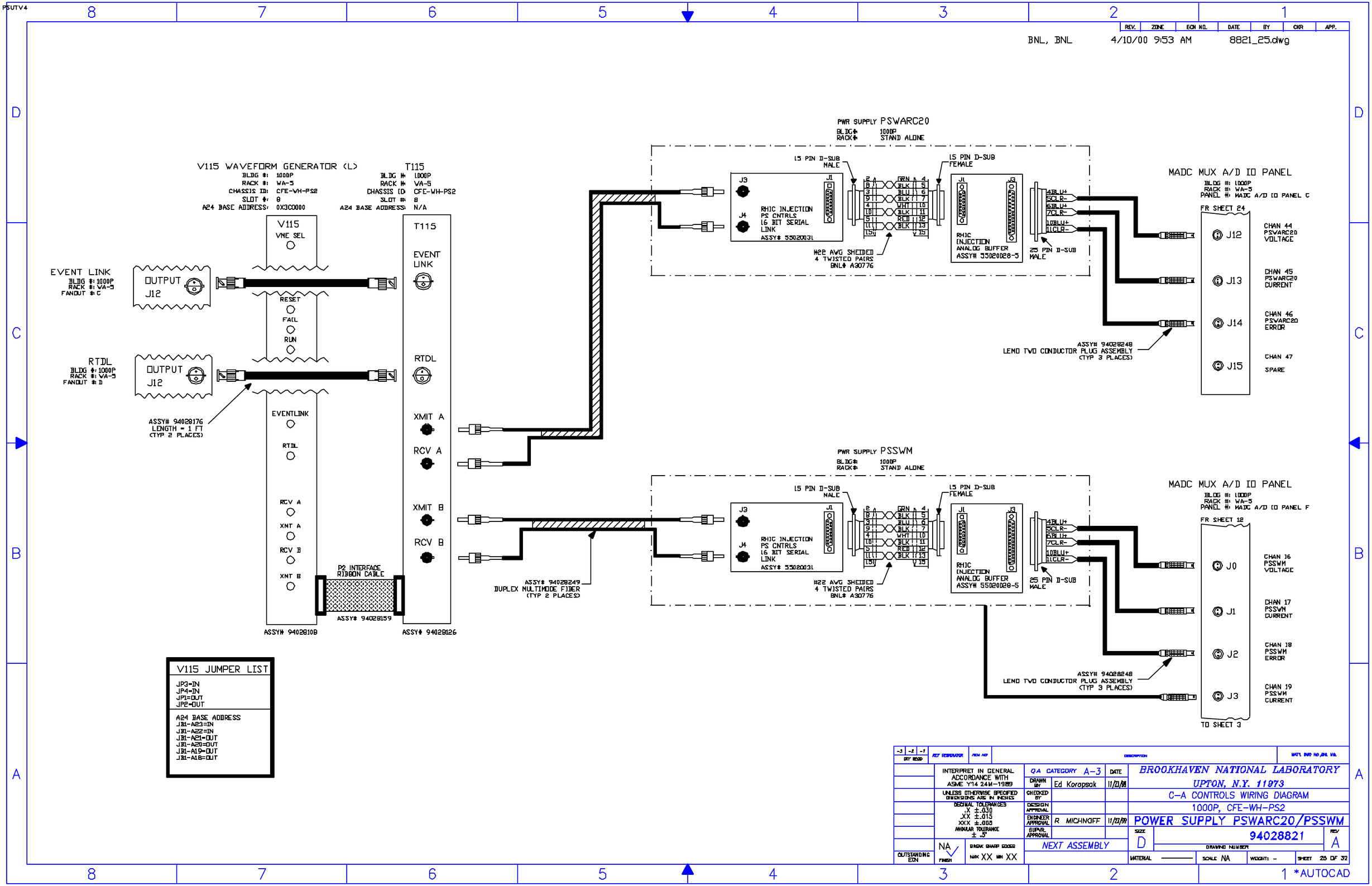

BNL, BNL 4/10/00 9:53 AM 8821_25.dwg
V115 WAVEFORM GENERATOR (L)
BLDG #: 1000P
RACK #: WA-5
CHASSIS ID: CFE-WH-PS2
SLOT #: 8
A24 BASE ADDRESS: 0X3C0000
T115
BLDG #: 1000P
RACK #: WA-5
CHASSIS ID: CFE-WH-PS2
SLOT #: 8
A24 BASE ADDRESS: N/A
V115
VME SEL
RESET
FAIL
RUN
EVENTLINK
RTDL
RCV A
XMT A
RCV B
XMT B
P2 INTERFACE RIBBON CABLE
ASSY# 94028159
ASSY# 94028108
ASSY# 94028126
T115
EVENT LINK
RTDL
XMIT A
RCV A
XMIT B
RCV B
EVENT LINK
BLDG #: 1000P
RACK #: WA-5
FANOUT #: C
OUTPUT J12
RTDL
BLDG #: 1000P
RACK #: WA-5
FANOUT #: D
OUTPUT J12
ASSY# 94028176
LENGTH = 1 FT
(TYP 2 PLACES)
PWR SUPPLY PSWARC20
BLDG#: 1000P
RACK#: STAND ALONE
15 PIN D-SUB MALE
15 PIN D-SUB FEMALE
J3
J4
J1
RHIC INJECTION PS CNTRLS 16 BIT SERIAL LINK
ASSY# 55020031
#22 AWG SHEIDED 4 TWISTED PAIRS
BNL# A30776
RHIC INJECTION ANALOG BUFFER
ASSY# 55020028-5
25 PIN D-SUB MALE
4BLU+
5CLR-
6BLU+
7CLR-
10BLU+
11CLR-
MADC MUX A/D IO PANEL
BLDG #: 1000P
RACK #: WA-5
PANEL #: MADC A/D IO PANEL C
FR SHEET 24
J12
J13
J14
J15
CHAN 44 PSWARC20 VOLTAGE
CHAN 45 PSWARC20 CURRENT
CHAN 46 PSWARC20 ERROR
CHAN 47 SPARE
ASSY# 94028248
LEMO TWO CONDUCTOR PLUG ASSEMBLY
(TYP 3 PLACES)
PWR SUPPLY PSSWM
BLDG#: 1000P
RACK#: STAND ALONE
15 PIN D-SUB MALE
15 PIN D-SUB FEMALE
J3
J4
J1
RHIC INJECTION PS CNTRLS 16 BIT SERIAL LINK
ASSY# 55020031
#22 AWG SHEIDED 4 TWISTED PAIRS
BNL# A30776
RHIC INJECTION ANALOG BUFFER
ASSY# 55020028-5
25 PIN D-SUB MALE
4BLU+
5CLR-
6BLU+
7CLR-
10BLU+
11CLR-
MADC MUX A/D IO PANEL
BLDG #: 1000P
RACK #: WA-5
PANEL #: MADC A/D IO PANEL F
FR SHEET 12
J0
J1
J2
J3
CHAN 16 PSSWM VOLTAGE
CHAN 17 PSSWM CURRENT
CHAN 18 PSSWM ERROR
CHAN 19 PSSWM CURRENT
TO SHEET 3
ASSY# 94028249
DUPLEX MULTIMODE FIBER
(TYP 2 PLACES)
ASSY# 94028248
LEMO TWO CONDUCTOR PLUG ASSEMBLY
(TYP 3 PLACES)
V115 JUMPER LIST
JP3=IN
JP4=IN
JP1=OUT
JP2=OUT
A24 BASE ADDRESS
JB1-A23=IN
JB1-A22=IN
JB1-A21=OUT
JB1-A20=OUT
JB1-A19=OUT
JB1-A18=OUT
INTERPRET IN GENERAL ACCORDANCE WITH ASME Y14.24M-1989
UNLESS OTHERWISE SPECIFIED DIMENSIONS ARE IN INCHES
DECIMAL TOLERANCES .X ±.030 .XX ±.015 .XXX ±.005
ANGULAR TOLERANCE ± .5°
NA
FINISH
BREAK SHARP EDGES
MAX XX MIN XX
OUTSTANDING ECN
QA CATEGORY A-3
DATE
DRAWN BY Ed Koropsak 11/21/99
CHECKED BY
DESIGN APPROVAL
ENGINEER APPROVAL R MICHNOFF 11/21/99
SUPVR. APPROVAL
NEXT ASSEMBLY
BROOKHAVEN NATIONAL LABORATORY
UPTON, N.Y. 11973
C-A CONTROLS WIRING DIAGRAM
1000P, CFE-WH-PS2
POWER SUPPLY PSWARC20/PSSWM
SIZE D
94028821
REV A
DRAWING NUMBER
MATERIAL
SCALE NA
WEIGHT: -
SHEET 26 OF 32
*AUTOCAD

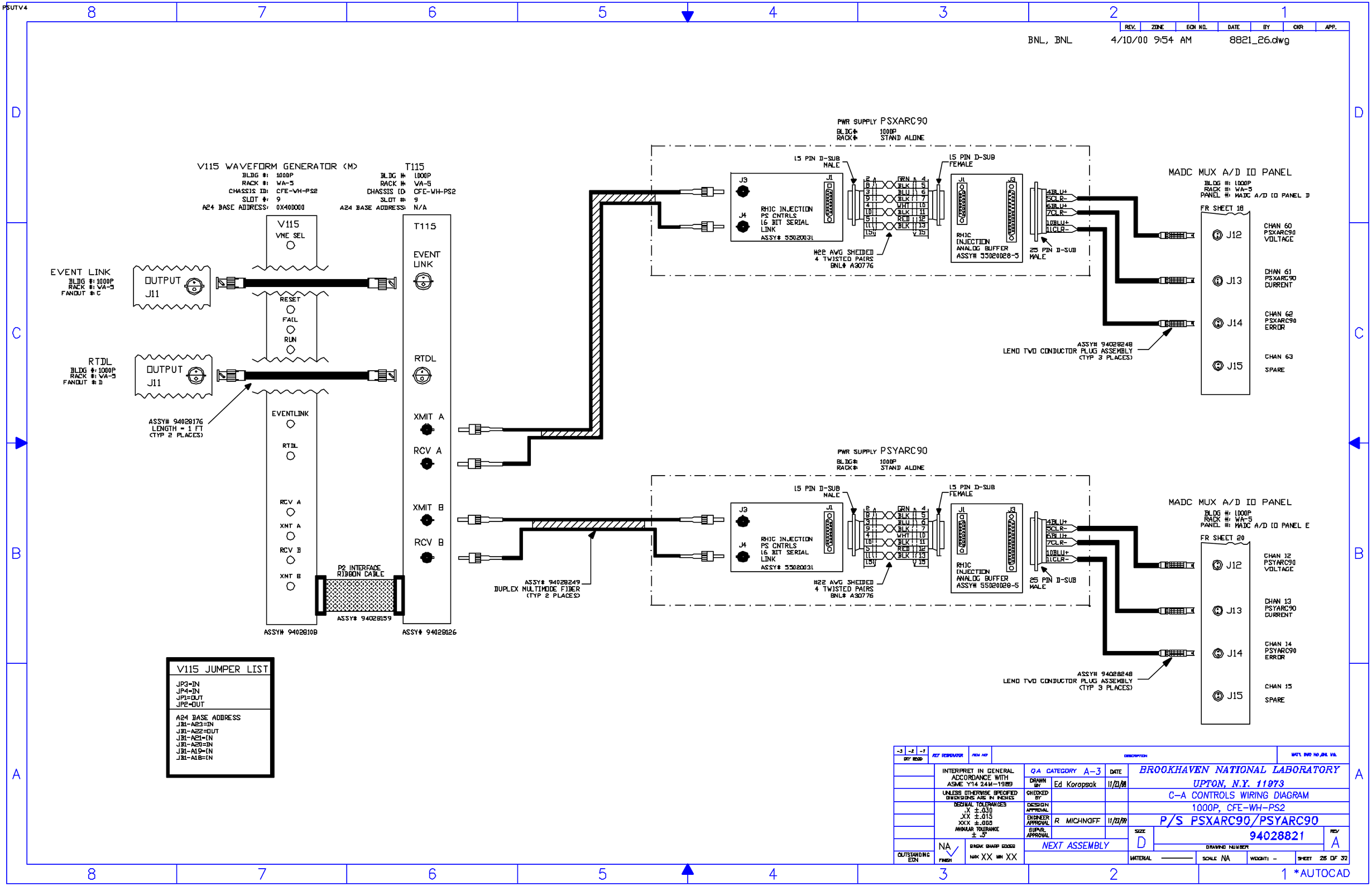

BNL, BNL 4/10/00 9:54 AM 8821_26.dwg
V115 WAVEFORM GENERATOR (M)
BLDG #: 1000P
RACK #: WA-5
CHASSIS ID: CFE-WH-PS2
SLOT #: 9
A24 BASE ADDRESS: 0X400000
T115
BLDG #: 1000P
RACK #: WA-5
CHASSIS ID: CFE-WH-PS2
SLOT #: 9
A24 BASE ADDRESS: N/A
V115
VME SEL
RESET
FAIL
RUN
EVENTLINK
RTDL
RCV A
XMT A
RCV B
XMT B
P2 INTERFACE RIBBON CABLE
ASSY# 94028159
ASSY# 94028108
ASSY# 94028126
EVENT LINK
BLDG #: 1000P
RACK #: WA-5
FANOUT #: C
OUTPUT J11
RTDL
BLDG #: 1000P
RACK #: WA-5
FANOUT #: D
OUTPUT J11
ASSY# 94028176
LENGTH = 1 FT
(TYP 2 PLACES)
T115
EVENT LINK
RTDL
XMIT A
RCV A
XMIT B
RCV B
ASSY# 94028249
DUPLEX MULTIMODE FIBER
(TYP 2 PLACES)
PWR SUPPLY PSXARC90
BLDG#: 1000P
RACK#: STAND ALONE
15 PIN D-SUB MALE
15 PIN D-SUB FEMALE
J3
J4
J1
RHIC INJECTION PS CNTRLS 16 BIT SERIAL LINK
ASSY# 55020031
#22 AWG SHEIDED 4 TWISTED PAIRS
BNL# A30776
RHIC INJECTION ANALOG BUFFER
ASSY# 55020028-5
25 PIN D-SUB MALE
4BLU+
5CLR-
6BLU+
7CLR-
10BLU+
11CLR-
ASSY# 94028248
LEMO TWO CONDUCTOR PLUG ASSEMBLY
(TYP 3 PLACES)
MADC MUX A/D IO PANEL
BLDG #: 1000P
RACK #: WA-5
PANEL #: MADC A/D IO PANEL D
FR SHEET 18
J12
J13
J14
J15
CHAN 60 PSXARC90 VOLTAGE
CHAN 61 PSXARC90 CURRENT
CHAN 62 PSXARC90 ERROR
CHAN 63 SPARE
PWR SUPPLY PSYARC90
BLDG#: 1000P
RACK#: STAND ALONE
15 PIN D-SUB MALE
15 PIN D-SUB FEMALE
J3
J4
J1
RHIC INJECTION PS CNTRLS 16 BIT SERIAL LINK
ASSY# 55020031
#22 AWG SHEIDED 4 TWISTED PAIRS
BNL# A30776
RHIC INJECTION ANALOG BUFFER
ASSY# 55020028-5
25 PIN D-SUB MALE
4BLU+
5CLR-
6BLU+
7CLR-
10BLU+
11CLR-
ASSY# 94028248
LEMO TWO CONDUCTOR PLUG ASSEMBLY
(TYP 3 PLACES)
MADC MUX A/D IO PANEL
BLDG #: 1000P
RACK #: WA-5
PANEL #: MADC A/D IO PANEL E
FR SHEET 20
J12
J13
J14
J15
CHAN 12 PSYARC90 VOLTAGE
CHAN 13 PSYARC90 CURRENT
CHAN 14 PSYARC90 ERROR
CHAN 15 SPARE
V115 JUMPER LIST
JP3=IN
JP4=IN
JP1=OUT
JP2=OUT
A24 BASE ADDRESS
JB1-A23=IN
JB1-A22=OUT
JB1-A21=IN
JB1-A20=IN
JB1-A19=IN
JB1-A18=IN
INTERPRET IN GENERAL ACCORDANCE WITH ASME Y14.24M-1989
UNLESS OTHERWISE SPECIFIED DIMENSIONS ARE IN INCHES
DECIMAL TOLERANCES .X ±.030 .XX ±.015 .XXX ±.005
ANGULAR TOLERANCE ± .5°
NA
FINISH
BREAK SHARP EDGES
MAX XX MIN XX
OUTSTANDING ECN
QA CATEGORY A-3
DATE
DRAWN BY Ed Koropsak 11/21/99
CHECKED BY
DESIGN APPROVAL
ENGINEER APPROVAL R MICHNOFF 11/21/99
SUPVR. APPROVAL
NEXT ASSEMBLY
BROOKHAVEN NATIONAL LABORATORY
UPTON, N.Y. 11973
C-A CONTROLS WIRING DIAGRAM
1000P, CFE-WH-PS2
P/S PSXARC90/PSYARC90
SIZE D
94028821
REV A
DRAWING NUMBER
MATERIAL
SCALE NA
WEIGHT: -
SHEET 26 OF 32
*AUTOCAD

BNL, BNL 4/10/00 10:16 AM 8821_27.dwg

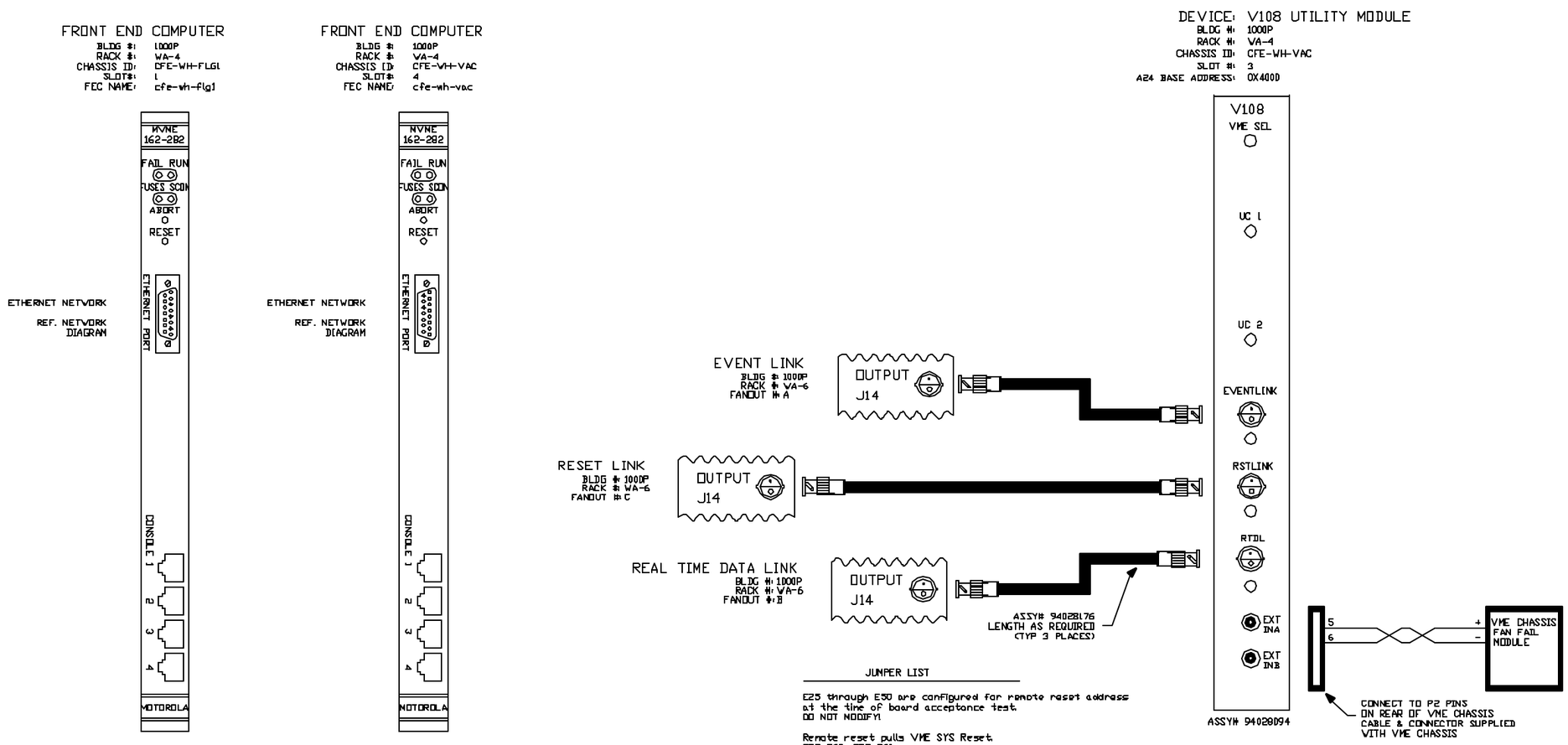

JUMPER LIST

E25 through E50 are configured for remote reset address at the time of board acceptance test.
DO NOT MODIFY!

Remote reset pulls VME SYS Reset.
E58-E60, E59-E61

A24 BASE ADDRESS= 4000h
E57-E13, E2-E14, E3-E15, E4-E16, E5-E17, E6-E18
E7-E19, E8-E20, E9-E21, E10-E22, E11-E24, E57-E23
SW1=OPEN
SW2=CLOSED
SW3=OPEN
SW4=OPEN

REV.	ZONE	ECN NO.	DATE	BY	CKR	APP.

-3 -2 -1 DIV REQD	REF DESIGNATOR	ITEM NO	DESCRIPTION	MAT'L IMM NO/JNL NO.

INTERPRET IN GENERAL ACCORDANCE WITH ASME Y14 24M-1989
UNLESS OTHERWISE SPECIFIED DIMENSIONS ARE IN INCHES
DECIMAL TOLERANCES
.X ±.030
.XX ±.015
.XXX ±.005
ANGULAR TOLERANCE ± .5°

NA FINISH
BREAK SHARP EDGES MAX XX MIN XX
OUTSTANDING ECN

QA CATEGORY A-3		DATE
DRAWN BY	Ed Koropsak	11/24/99
CHECKED BY		
DESIGN APPROVAL		
ENGINEER APPROVAL	R MICHNOFF	11/24/99
SUPVR. APPROVAL		

NEXT ASSEMBLY

BROOKHAVEN NATIONAL LABORATORY
UPTON, N.Y. 11973
C-A CONTROLS WIRING DIAGRAM
1000P, VME CHASSIS CFE-WH-FLG1/VAC
FT END COMP/V108 UTIL MODULE

SIZE D | DRAWING NUMBER 94028821 | REV A

MATERIAL — | SCALE NA | WEIGHT: - | SHEET 27 OF 32

1 *AUTOCAD

BNL, BNL 4/10/00 10:18 AM 8821_28.dwg

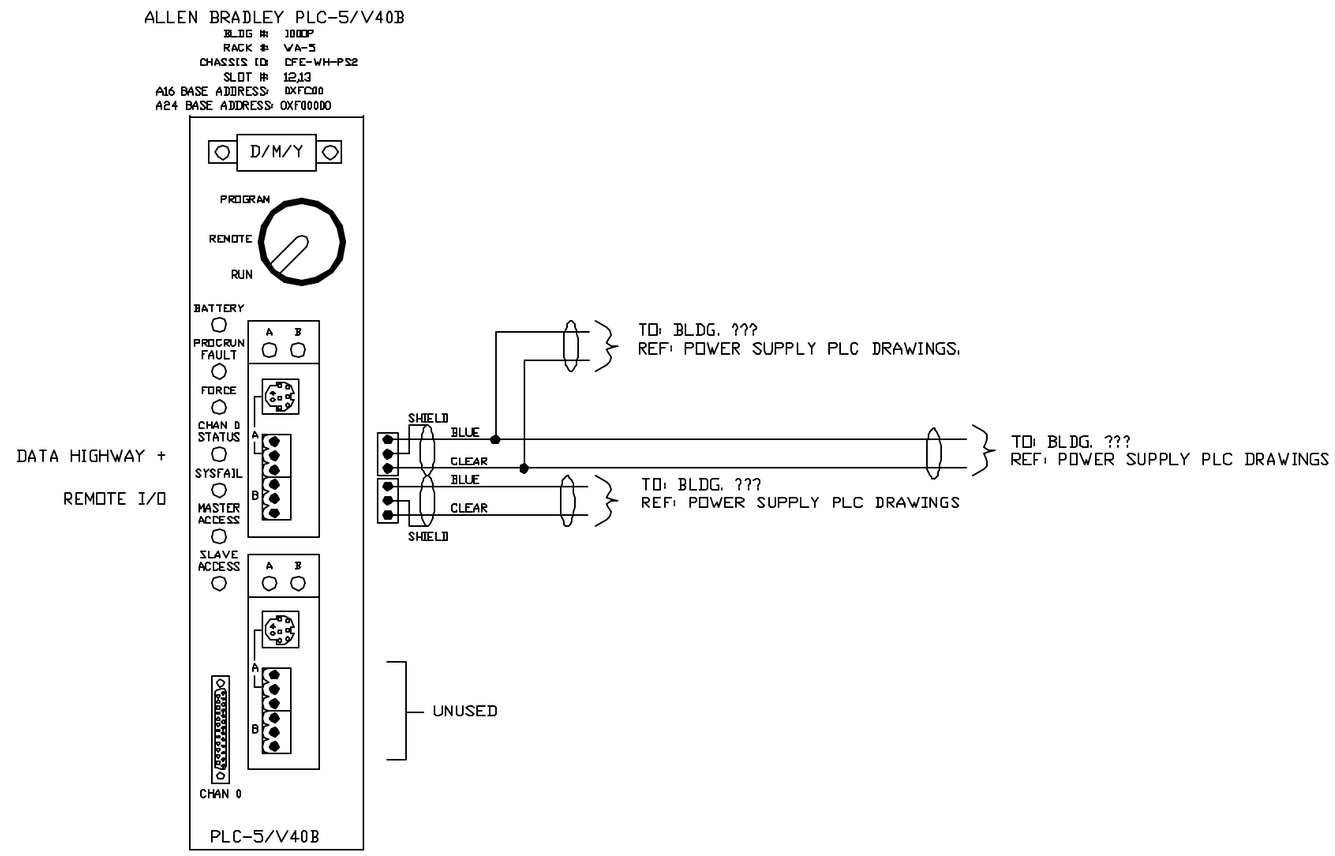

REV.	ZONE	ECN NO.	DATE	BY	CKR	APP.

INTERPRET IN GENERAL ACCORDANCE WITH ASME Y14.24M-1989	Q.A. CATEGORY A-3	DATE	BROOKHAVEN NATIONAL LABORATORY UPTON, N.Y. 11973
	DRAWN BY Ed Koropsak	11/22/99	RHIC CONTROLS WIRING DIAGRAM
UNLESS OTHERWISE SPECIFIED DIMENSIONS ARE IN INCHES	CHECKED BY		BLDG. 1000P, VME CHASSIS CFE-WH-PS2
DECIMAL TOLERANCES .X ± 0.10 .XX ± .015 .XXX ± .000 ANGULAR TOLERANCE ± .5°	DESIGN APPROVAL		ALLEN BRADLEY VME PLC-5
	ENGINEER APPROVAL R MICHNOFF	11/23/99	SIZE D — 94028821 — REV A
	SUPVR. APPROVAL		
NA FINISH	BREAK SHARP EDGES MAX XX MIN XX	NEXT ASSEMBLY	DRAWING NUMBER
OUTSTANDING ECN			MATERIAL ——— SCALE NA WEIGHT: – SHEET 28 OF 32

*AUTOCAD

BNL, BNL 4/6/00 4:08 PM 8774_29.dwg

ATR LINE SYSTEM

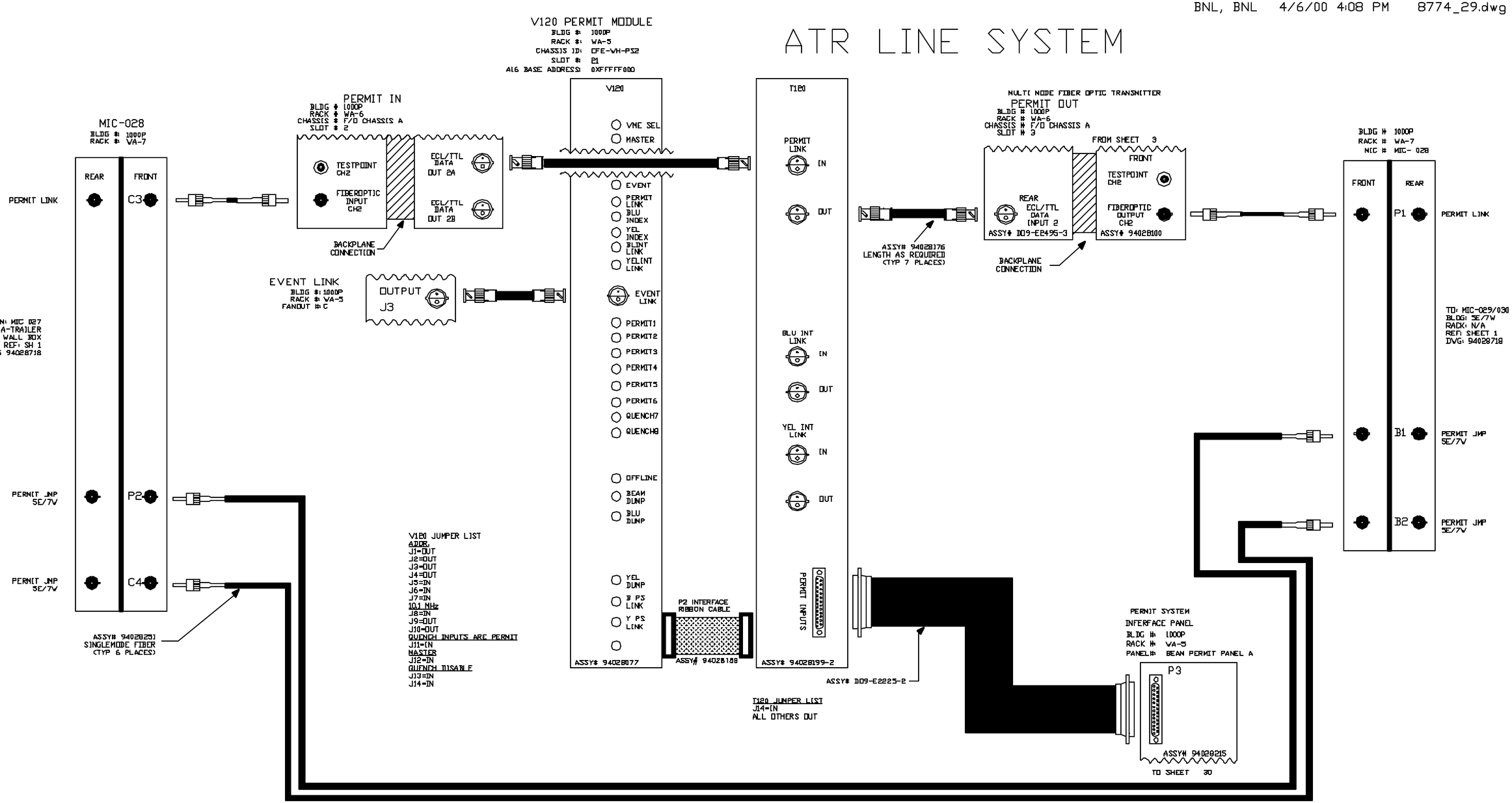

V120 JUMPER LIST
ADDR.
J1=OUT
J2=OUT
J3=OUT
J4=OUT
J5=IN
J6=IN
J7=IN
10.1 MHz
J8=IN
J9=OUT
J10=OUT
QUENCH INPUTS ARE PERMIT
J11=IN
MASTER
J12=IN
QUENCH DISABLE
J13=IN
J14=IN

REV.	ZONE	ECN NO.	DATE	BY	CKR	APP.

-3 -2 -1 DTY REQD	REF DESIGNATOR	ITEM NO	DESCRIPTION	MAT'L INV NO./ENG NO.

INTERPRET IN GENERAL ACCORDANCE WITH ASME Y14.24M-1989
UNLESS OTHERWISE SPECIFIED DIMENSIONS ARE IN INCHES
DECIMAL TOLERANCES .X ±.030 .XX ±.015 .XXX ±.005
ANGULAR TOLERANCE ± .5°
OUTSTANDING ECN
NA FINISH
BREAK SHARP EDGES MAX XX MIN XX

Q.A. CATEGORY A-3		DATE
DRAWN BY	Ed Koropsak	11/21/99
CHECKED BY		
DESIGN APPROVAL		
ENGINEER APPROVAL	R. MICHNOFF	11/23/99
SUPVR. APPROVAL		

NEXT ASSEMBLY

BROOKHAVEN NATIONAL LABORATORY
UPTON, N.Y. 11973
C-A CONTROLS WIRING DIAGRAM
1000P
PERMIT SYSTEM

SIZE D | 94028821 | REV A
DRAWING NUMBER
MATERIAL — | SCALE NA | WEIGHT: - | SHEET 29 OF 32

1 *AUTOCAD

REV.	ZONE	ECN NO.	DATE	BY	CKR	APP.

BNL, BNL 4/6/00 4:00 PM 8774_30.dwg

PERMIT SYSTEM INTERFACE MODULE

BLDG #: 1000P
RACK #: WA-5
PANEL #: PERMIT I/F PANEL A

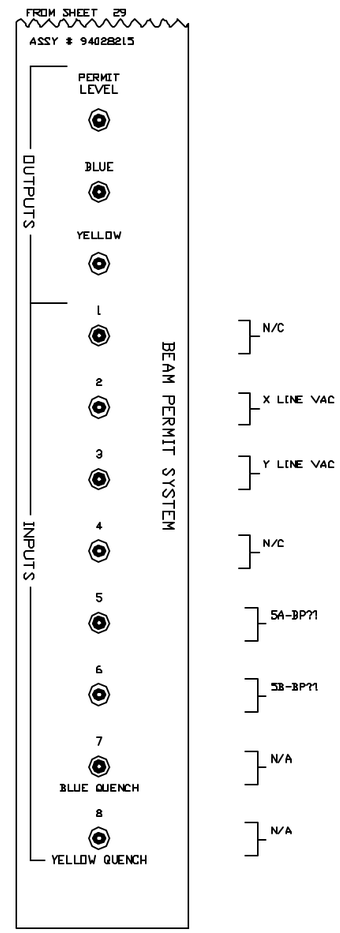

-3	-2	-1	REF DESIGNATOR	ITEM NO	DESCRIPTION	MAT'L INFO NO./INL NO.
DAT REQD						

INTERPRET IN GENERAL ACCORDANCE WITH ASME Y14.24M-1989

UNLESS OTHERWISE SPECIFIED DIMENSIONS ARE IN INCHES
DECIMAL TOLERANCES
.X ±.030
.XX ±.015
.XXX ±.005
ANGULAR TOLERANCE
± .5°

NA FINISH

BREAK SHARP EDGES
MAX XX MIN XX

OUTSTANDING ECN

QA CATEGORY A-3

		DATE
DRAWN BY	Ed Koropsak	11/23/98
CHECKED BY		
DESIGN APPROVAL		
ENGINEER APPROVAL	R. MICHNOFF	11/23/99
SUPVR. APPROVAL		

NEXT ASSEMBLY

BROOKHAVEN NATIONAL LABORATORY
UPTON, N.Y. 11973

RHIC CONTROLS WIRING DIAGRAM
BLDG 1000P, RACK WA-5
PERMIT SYSTEM INTERFACE PANEL

SIZE D
DRAWING NUMBER 94028821
REV A

MATERIAL ——— SCALE NA WEIGHT: – SHEET 30 OF 32

*AUTOCAD

BNL, BNL 4/10/00 2:37 PM 8821_31.dwg

U,V,W LINE SYSTEM

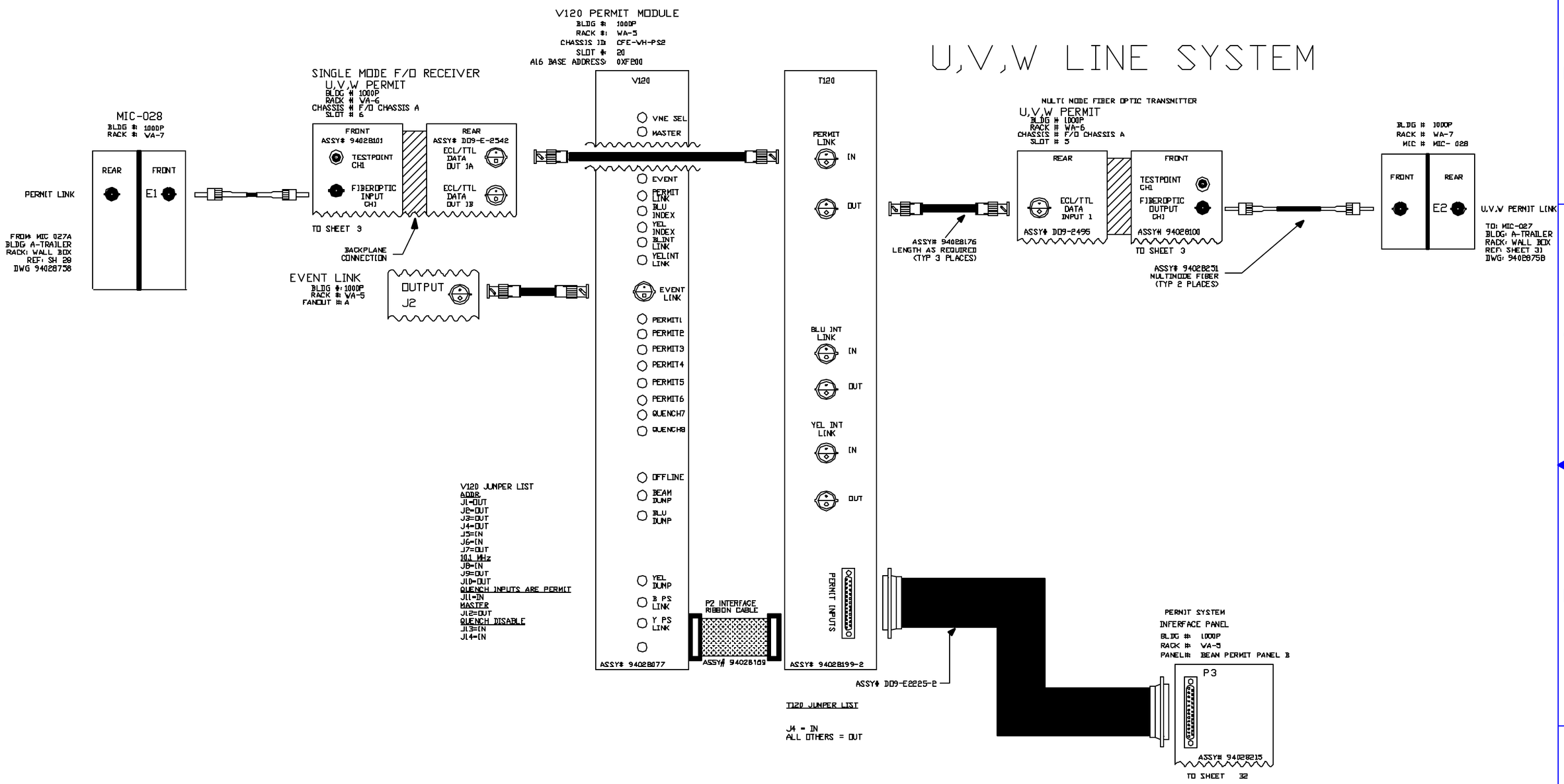

V120 JUMPER LIST
ADDR
J1=OUT
J2=OUT
J3=OUT
J4=OUT
J5=IN
J6=IN
J7=OUT
10.1 MHz
J8=IN
J9=OUT
J10=OUT
QUENCH INPUTS ARE PERMIT
J11=IN
MASTER
J12=OUT
QUENCH DISABLE
J13=IN
J14=IN

T120 JUMPER LIST

J4 = IN
ALL OTHERS = OUT

REV	ZONE	ECN NO.	DATE	BY	CKR	APP.

-3 -2 -1 DIV REQD	REF DESIGNATOR	ITEM NO	DESCRIPTION	MAT'L BAR NO/SNL VA

INTERPRET IN GENERAL ACCORDANCE WITH ASME Y14 24M-1989
UNLESS OTHERWISE SPECIFIED DIMENSIONS ARE IN INCHES
DECIMAL TOLERANCES .X ±.030 .XX ±.015 .XXX ±.005
ANGULAR TOLERANCE ± .5°
NA FINISH
BREAK SHARP EDGES MAX XX MIN XX
OUTSTANDING ECN

QA CATEGORY A-3		DATE
DRAWN BY	Ed Koropsak	4/6/00
CHECKED BY		
DESIGN APPROVAL		
ENGINEER APPROVAL	R. MICHNOFF	4/6/00
SUPVR. APPROVAL		

NEXT ASSEMBLY

BROOKHAVEN NATIONAL LABORATORY
UPTON, N.Y. 11973
RHIC CONTROLS WIRING DIAGRAM
BLDG 1000P, CHASSIS CFE-WH-PS2
V120/T120 PERMIT SYSTEM

SIZE D | 94028821 | REV A
DRAWING NUMBER
MATERIAL ——— | SCALE NA | WEIGHT: – | SHEET 31 OF 32

1 *AUTOCAD

REV.	ZONE	ECN NO.	DATE	BY	CKR	APP.

BNL, BNL 4/6/00 3:50 PM 8821_32.dwg

PERMIT SYSTEM INTERFACE MODULE

BLDG #: 1000P
RACK #: WA-5
PANEL #: PERMIT I/F PANEL B

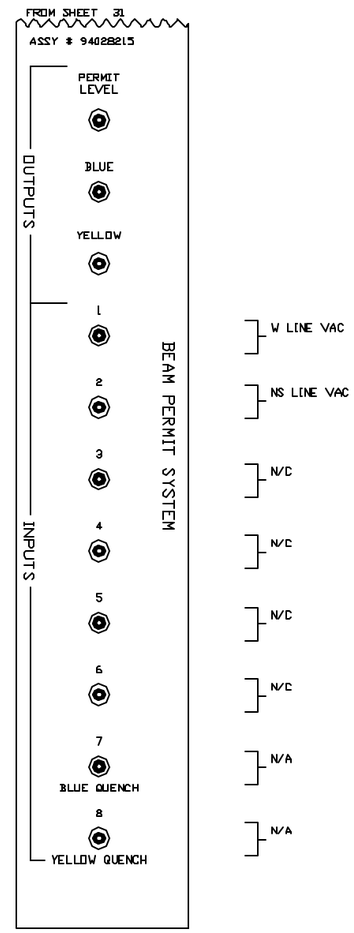

-3	-2	-1	REF DESIGNATOR	ITEM NO	DESCRIPTION	MAT'L INFO NO./INL NO.
DAT REQD						

INTERPRET IN GENERAL ACCORDANCE WITH ASME Y14.24M-1989

UNLESS OTHERWISE SPECIFIED DIMENSIONS ARE IN INCHES

DECIMAL TOLERANCES
.X ±.030
.XX ±.015
.XXX ±.005
ANGULAR TOLERANCE
± .5°

OUTSTANDING ECN

NA
FINISH

BREAK SHARP EDGES
MAX XX MIN XX

QA CATEGORY A-3		DATE
DRAWN BY	Ed Koropsak	4/6/00
CHECKED BY		
DESIGN APPROVAL		
ENGINEER APPROVAL	R. MICHNOFF	4/8/00
SUPVR. APPROVAL		

NEXT ASSEMBLY

BROOKHAVEN NATIONAL LABORATORY
UPTON, N.Y. 11973

RHIC CONTROLS WIRING DIAGRAM
BLDG 1000P, RACK WA-5

PERMIT SYSTEM INTERFACE PANEL

SIZE D
DRAWING NUMBER 94028821
REV A

MATERIAL ——— SCALE NA WEIGHT: – SHEET 32 OF 32

1 *AUTOCAD