Controls, BNL 8/28/2003 1:06 PM d36-e1126_7.dwg

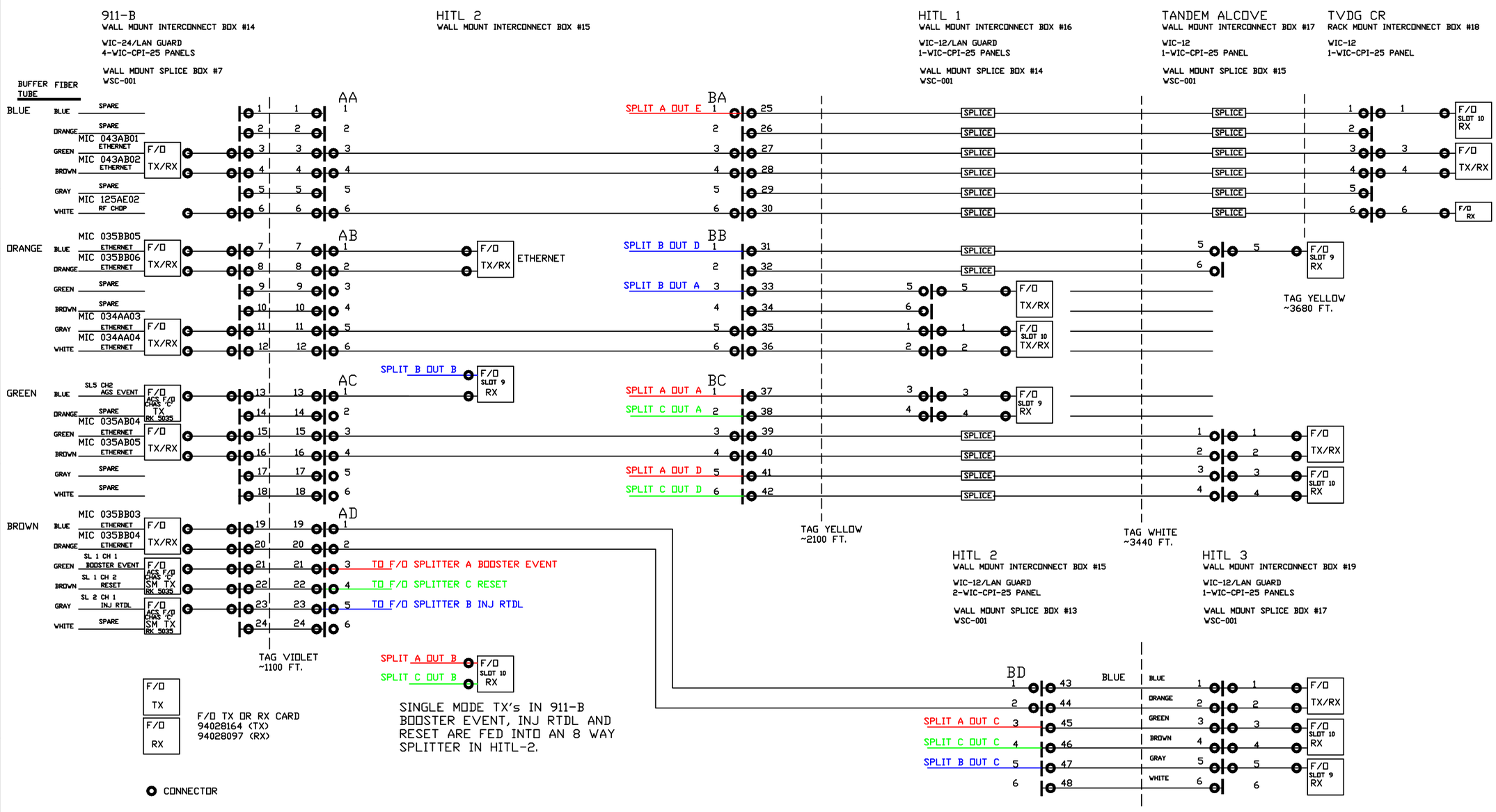

911-B TO HITL 2 IS A 24 FIBER LOOSE TUBE ARMORED CABLE,
HITL 2 TO HITL 3 TO HITL 1 TO TVDG ALCOVE IS AN 18 FIBER LOOSE TUBE ARMORED CABLE.
TVDG ALCOVE TO TVDG MCR IS A 6 FIBER INDOOR DITRIBUTION CABLE.
ALL CABLES ARE 62.5/125 FIBER.

NOTE:DISTANCES SHOWN ARE REFERENCED FROM 911-B.

INTERPRET IN GENERAL ACCORDANCE WITH ASME Y14.24M-1989	Q.A. CATEGORY A-3	DATE	BROOKHAVEN NATIONAL LABORATORY
	DRAWN BY Ed Koropsak	4/20/01	UPTON, N.Y. 11973
UNLESS OTHERWISE SPECIFIED DIMENSIONS ARE IN INCHES	CHECKED BY NOBODY		AGS CONTROLS
DECIMAL TOLERANCES .X ±.030 .XX ±.015 .XXX ±.005 ANGULAR TOLERANCE ± .5°	DESIGN APPROVAL		FIBER OPTIC PATHS
	ENGINEER APPROVAL NONE		HITL LINE
	SUPVR. APPROVAL		SIZE D — DRAWING NUMBER D36-E1126 — REV. A
NA FINISH — BREAK SHARP EDGES MAX. XX MIN. XX	NEXT ASSEMBLY		MATERIAL: — SCALE: FULL WEIGHT: – SHEET 7 OF 8

*AUTOCAD