Smart actuators/sensors based on magneto-elastic materials

Daniele Davino

davino@unisannio.it

University of Sannio - Dept. of Engineering

Lab.I.Ri.N.T.I. - University of Sannio

- magnetic characterization of samples
- mechanical characterization of materials (Young's Modulus, etc.)
- integrated characterization of electro-mechanical devices.
- main devices:
  - vectorial vibration sample magnetometer
  - compression-traction load test system (5kN)
  - integrated system for the generation of arbitrary magnetic field (computer controlled)

Outline

- Short introduction to magneto-elastic materials (Terfenol-D)
- A phenomenological approach to magneto-elastic devices design
- Example: a linear actuator
- Example: a linear magnetic field sensor
- Conclusions and foreseen

Typical actuators with Terfenol-D

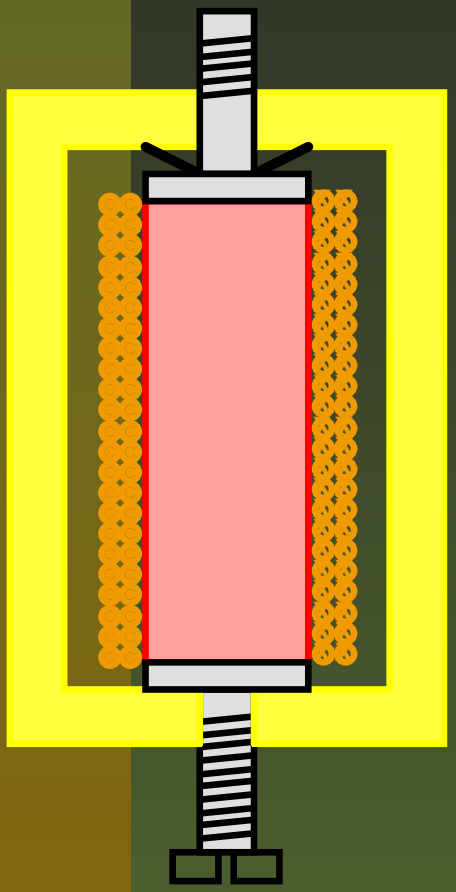

www.energeninc.com

Typical actuators with Terfenol-D

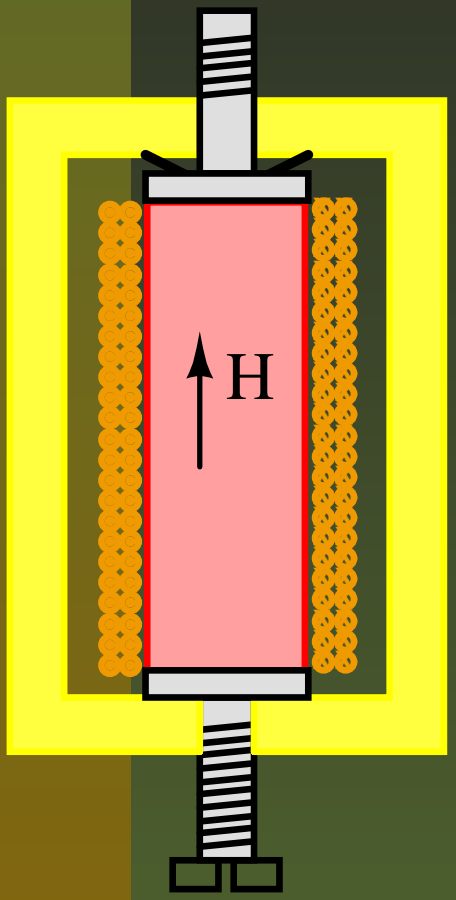

www.energeninc.com

Typical actuators with Terfenol-D

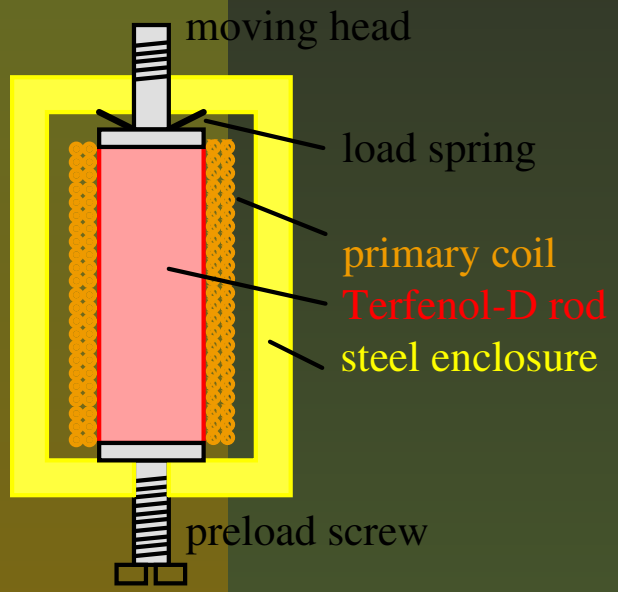

www.etrema.com

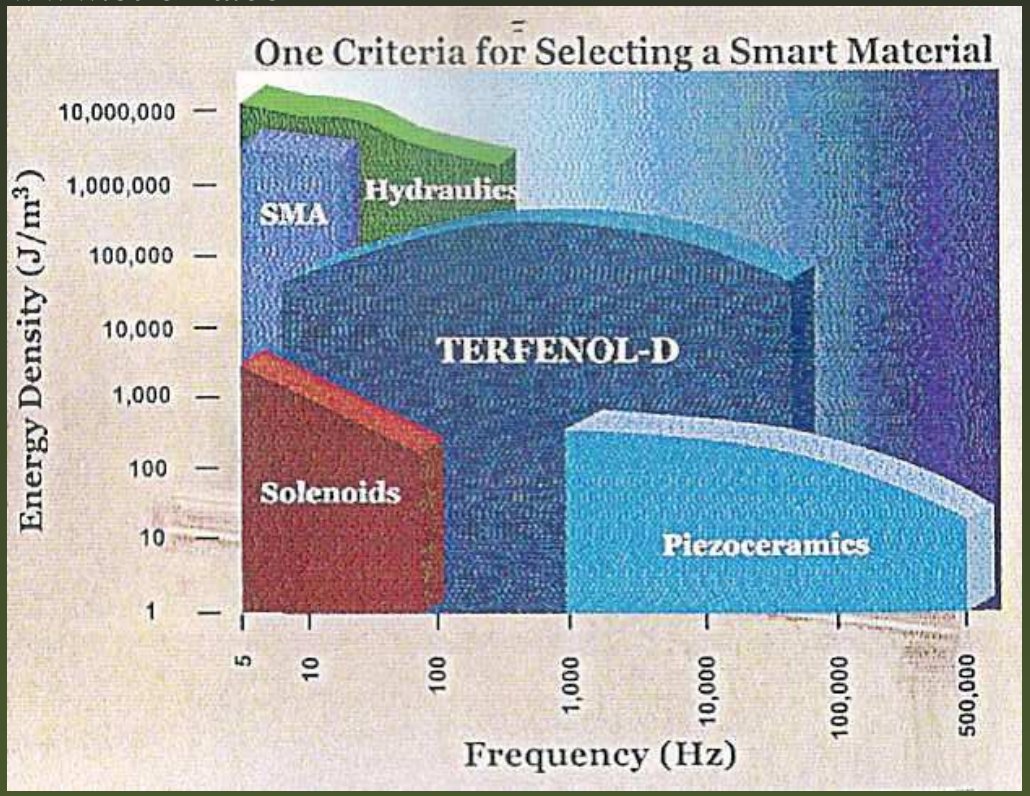

Terfenol-D properties

www.etrema.com

Terfenol-D properties

www.etrema.com

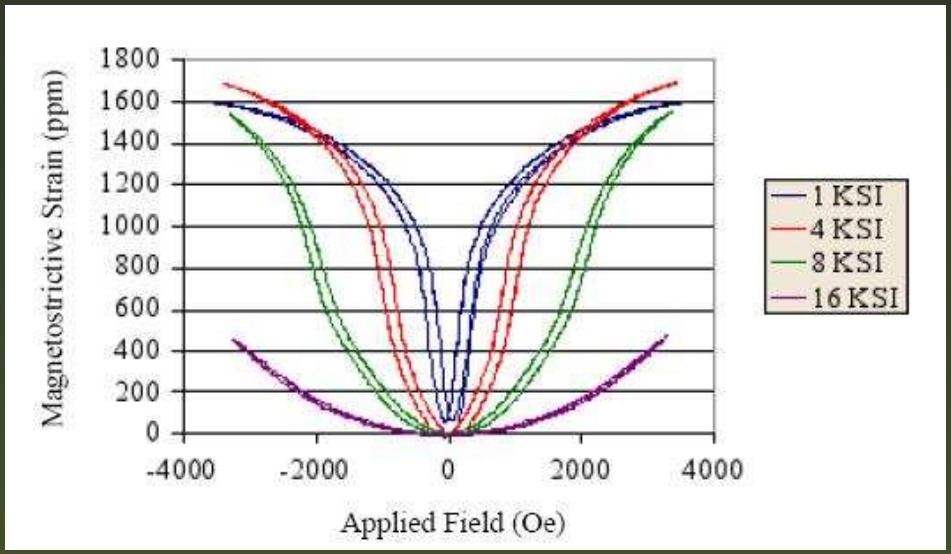

Terfenol-D properties

www.etrema.com

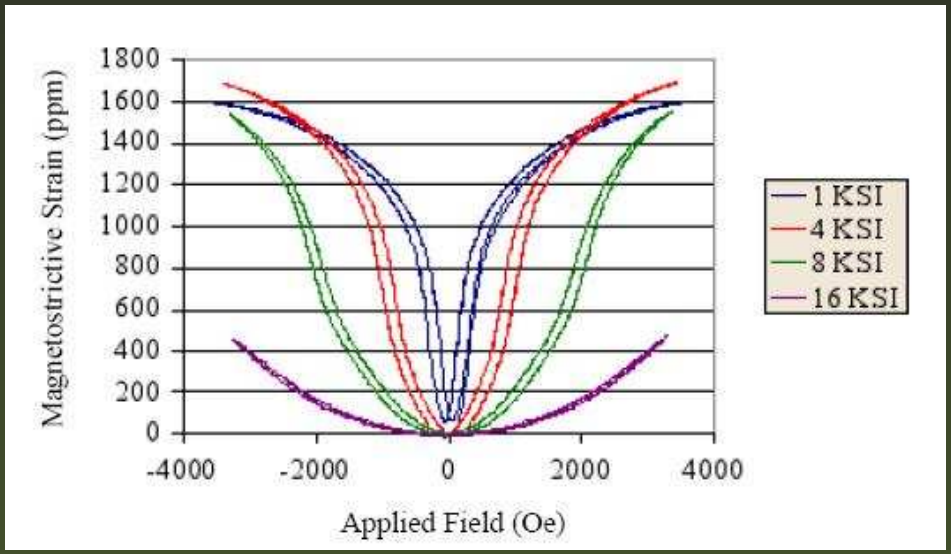

- max elongation is 1600μstrain at $H = 240$kA/m $\Rightarrow$ 1.6mm deformation for a 1m long rod

Terfenol-D properties

www.etrema.com

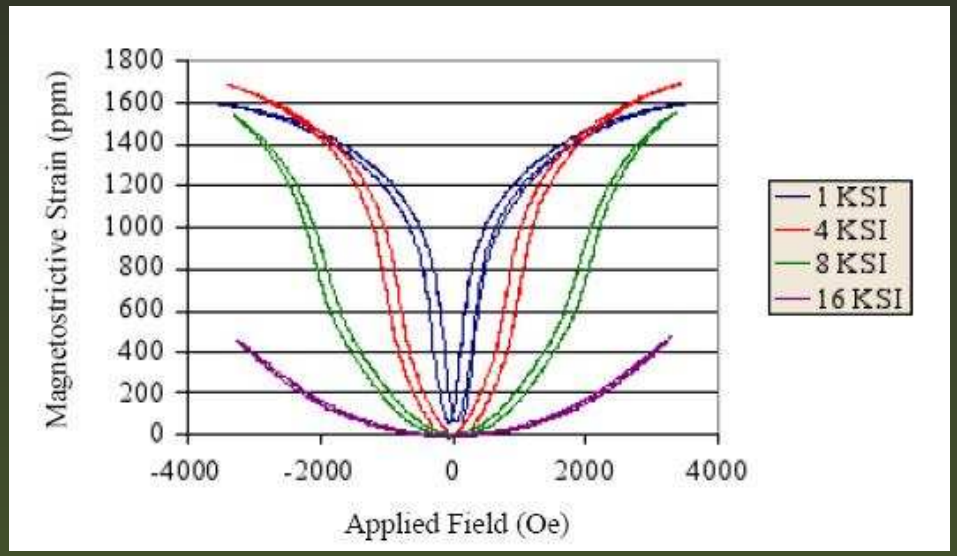

- max elongation is 1600μstrain at $H = 240$kA/m $\Rightarrow$ 1.6mm deformation for a 1m long rod
- non linear, isteretic characteristics: $\lambda = F_1(H, \sigma)$ e $B = F_2(H, \sigma)$ (σ is the compressive load)

Terfenol-D properties

www.etrema.com

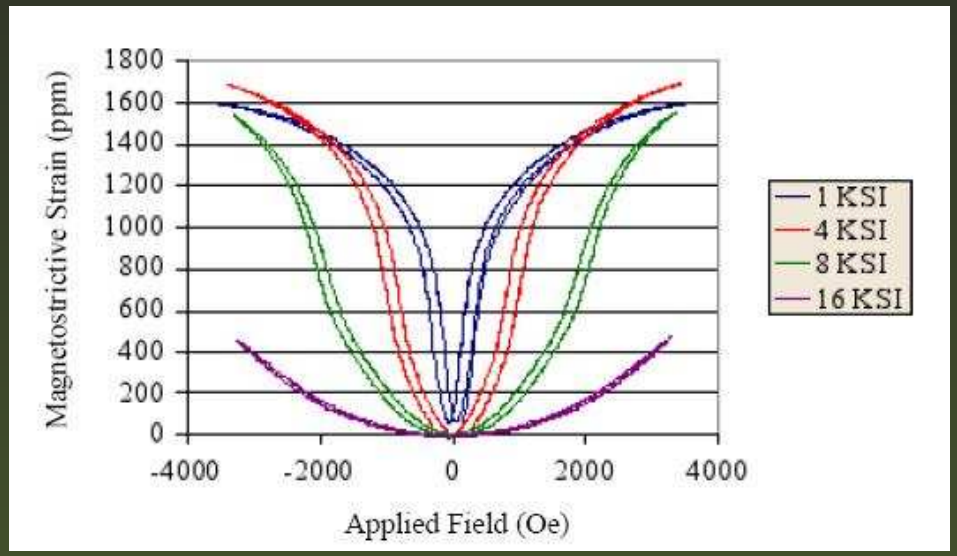

- max elongation is 1600μstrain at $H = 240$kA/m $\Rightarrow$ 1.6mm deformation for a 1m long rod
- non linear, isteretic characteristics: $\lambda = F_1(H, \sigma)$ e $B = F_2(H, \sigma)$ (σ is the compressive load)
- magneto-elastic (Joule effect), elasto-magnetic coupling (Villari effect)

Why smart actuators / sensors ?

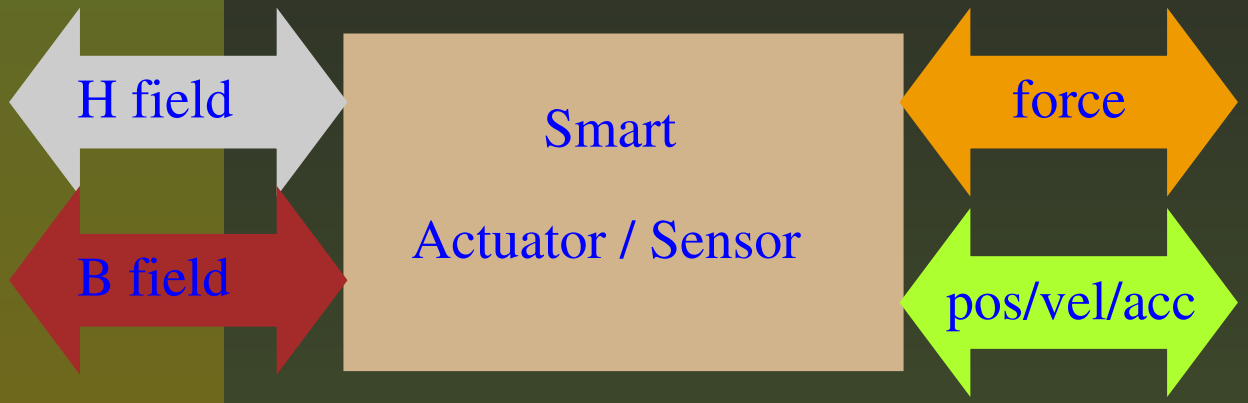

- Sensing and actuating capabilities can be combined in one device
- …with a *smart* integration of magneto-elastic materials properties and feedback techniques
- embedded smart controller (microprocessors), power section on board, etc.
- one device can be used for different tasks!
  …software update

Applications (present and future)

- Micropositioning (SRF, tooling machines, robots, etc.)
- Active vibrations damping, hi-fi (loudspeakers)
- Sensing applications (magnetic fields, forces, deformations, etc.)

Applications (present and future)

- Micropositioning (SRF, tooling machines, robots, etc.)
- Active vibrations damping, hi-fi (loudspeakers)
- Sensing applications (magnetic fields, forces, deformations, etc.)

But:

- How to deal with non-local hysteresis? $\rightarrow$

Applications (present and future)

- Micropositioning (SRF, tooling machines, robots, etc.)
- Active vibrations damping, hi-fi (loudspeakers)
- Sensing applications (magnetic fields, forces, deformations, etc.)

But:

- How to deal with non-local hysteresis? $\rightarrow$
- *solution*: hysteresis compensation $\Rightarrow$ quasi-linear system

Applications (present and future)

- Micropositioning (SRF, tooling machines, robots, etc.)
- Active vibrations damping, hi-fi (loudspeakers)
- Sensing applications (magnetic fields, forces, deformations, etc.)

But:

- How to deal with non-local hysteresis? $\rightarrow$
- *solution*: hysteresis compensation $\Rightarrow$ quasi-linear system

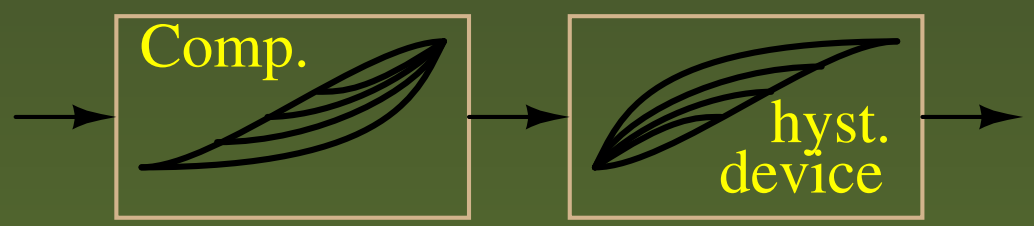

Applications (present and future)

- Micropositioning (SRF, tooling machines, robots, etc.)
- Active vibrations damping, hi-fi (loudspeakers)
- Sensing applications (magnetic fields, forces, deformations, etc.)

But:

- How to deal with non-local hysteresis? $\rightarrow$
- *solution*: hysteresis compensation $\Rightarrow$ quasi-linear system

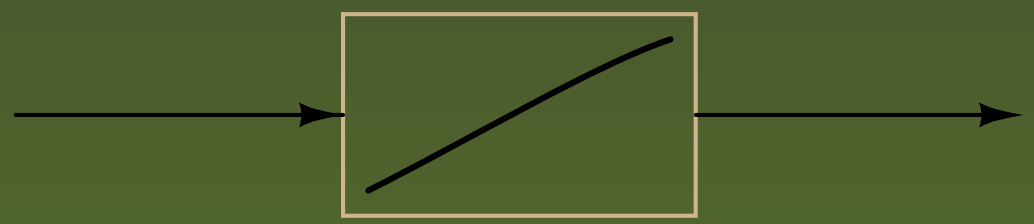

A model based approach

An algorithm able to represent the hysteresis and, hopefully, its **inverse**: the Preisach model

A model based approach

An algorithm able to represent the hysteresis and, hopefully, its **inverse**: the Preisach model

- pros: **computational effort**,

A model based approach

An algorithm able to represent the hysteresis and, hopefully, its **inverse**: the Preisach model

- pros: **computational effort**, identification procedure

A model based approach

An algorithm able to represent the hysteresis and, hopefully, its **inverse**: the Preisach model

- pros: **computational effort**, identification procedure
- cons: just a matematical model,

A model based approach

An algorithm able to represent the hysteresis and, hopefully, its **inverse**: the Preisach model

- pros: **computational effort**, identification procedure
- cons: just a matematical model, only quasi-static behavior, zero error only on identification input

D. Davino, C. Natale, S. Pirozzi, C. Visone, A fast compensation algorithm for real-time control of magnetostrictive actuators, J. Mag. and Mag. Mat., vol. 290-291, (2005)

A model based approach

An algorithm able to represent the hysteresis and, hopefully, its **inverse**: the Preisach model

- pros: **computational effort**, identification procedure
- cons: just a matematical model, only quasi-static behavior, zero error only on identification input

D. Davino, C. Natale, S. Pirozzi, C. Visone, A fast compensation algorithm for real-time control of magnetostrictive actuators, J. Mag. and Mag. Mat., vol. 290-291, (2005)

Other methods: fuzzy, neural networks

- pros: adaptiveness, identification noise rejection
- cons: **implementation** and/or computational effort

A compensated (linear) actuator

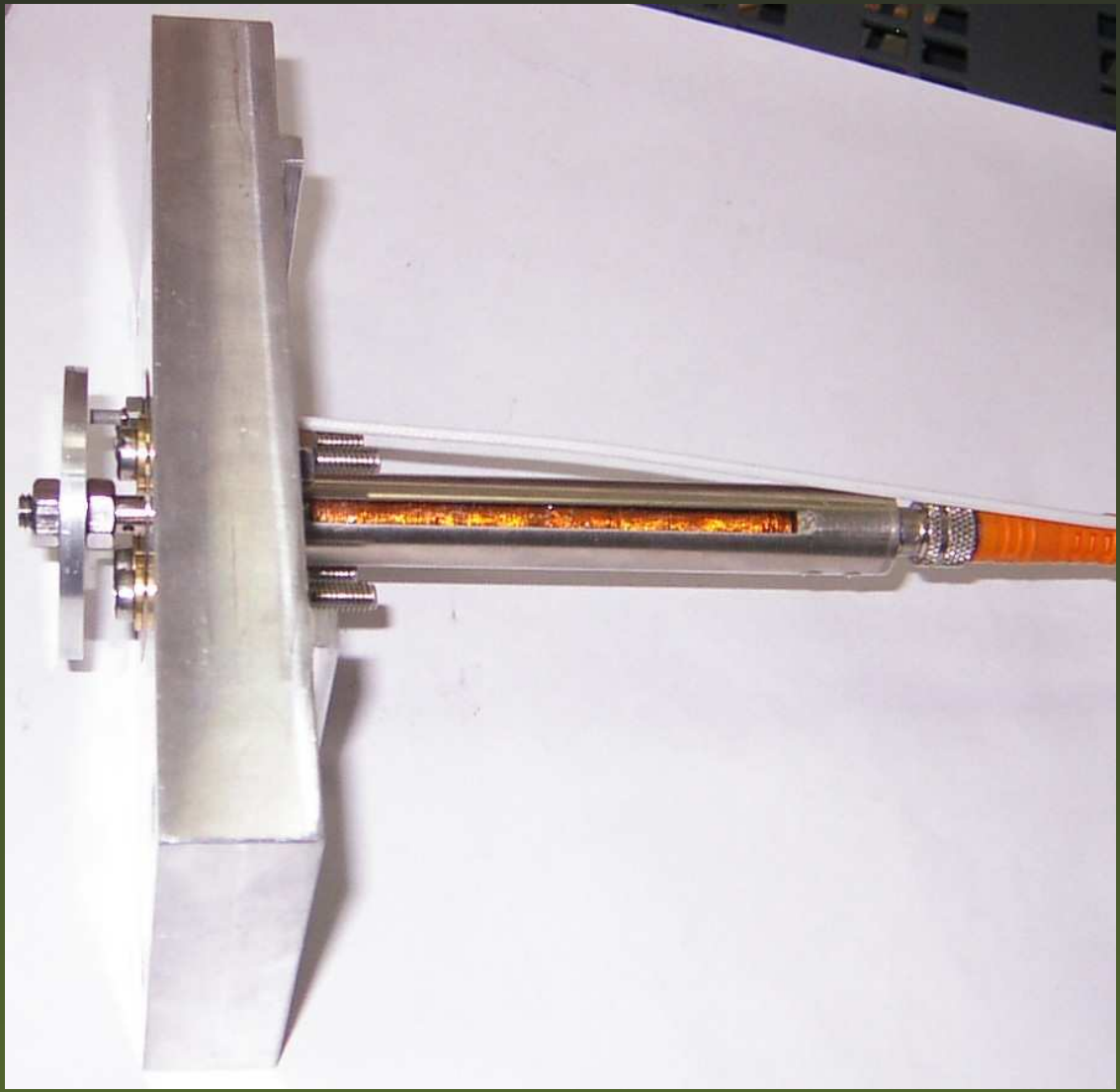

A compensated (linear) actuator

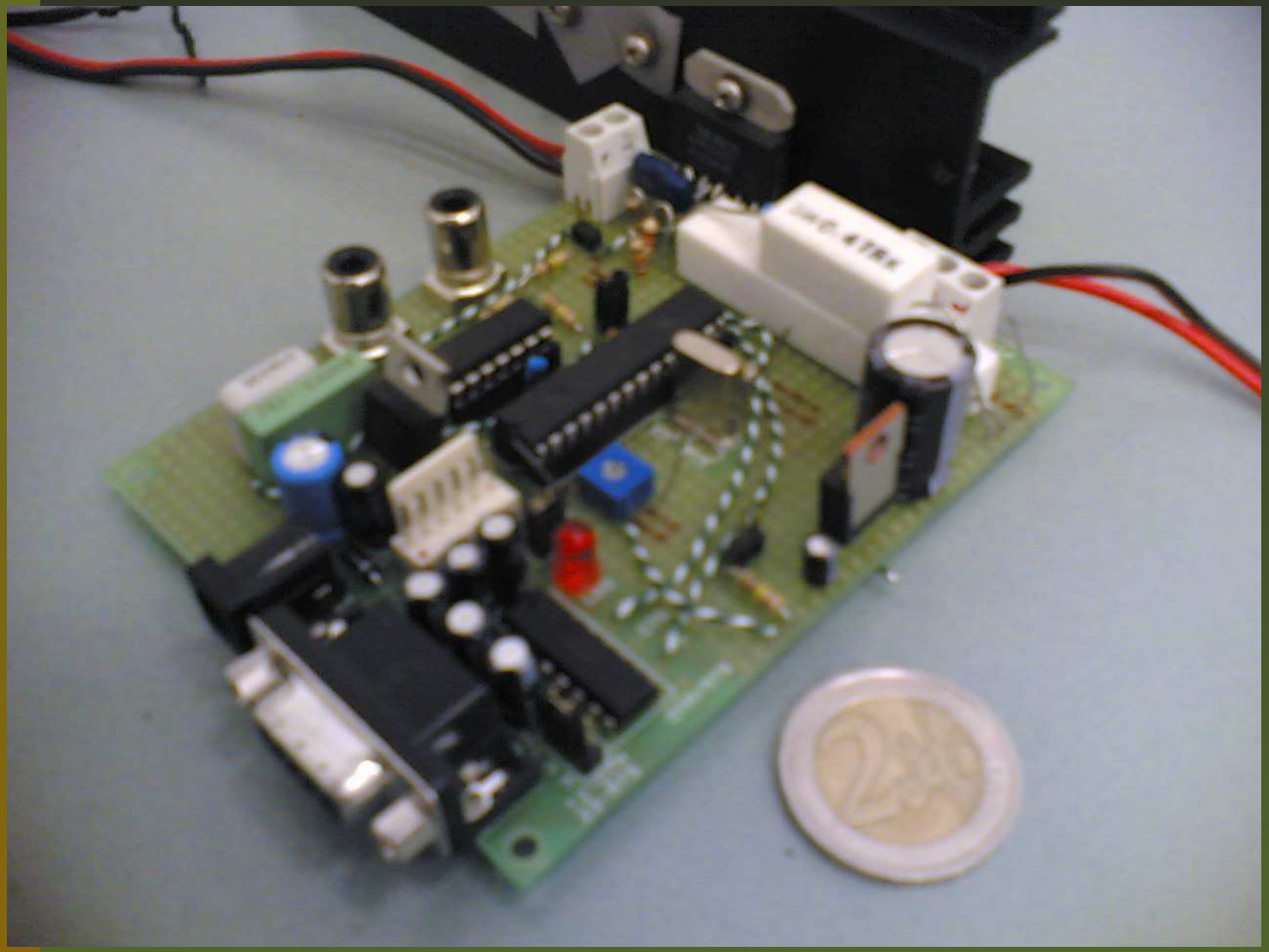

A compensated (linear) actuator

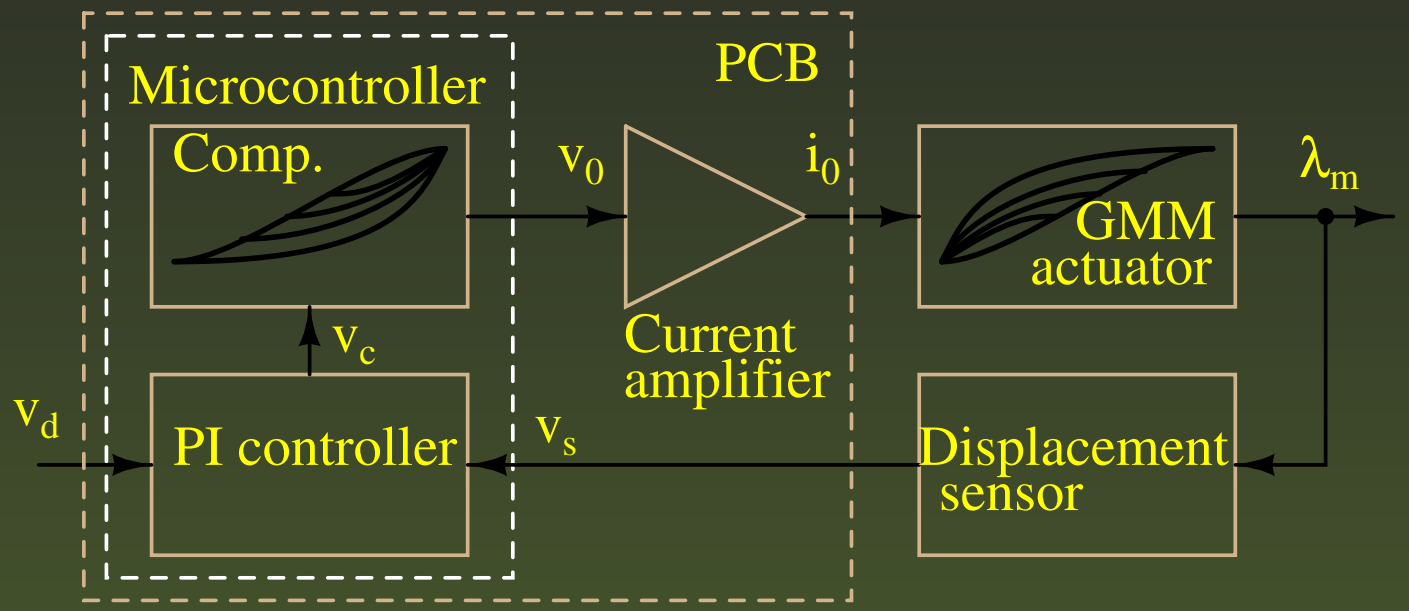

- 16 bit PIC microcontroller (30MFlops, 40MHz clock), four 10bit A/D converters (0-5V range), one PWM modulator
- eddy current prossimity sensor
- 2A/V gain current amplifier on board (4A max)
- 20μm max displacement

Identification

first order reversal curves:

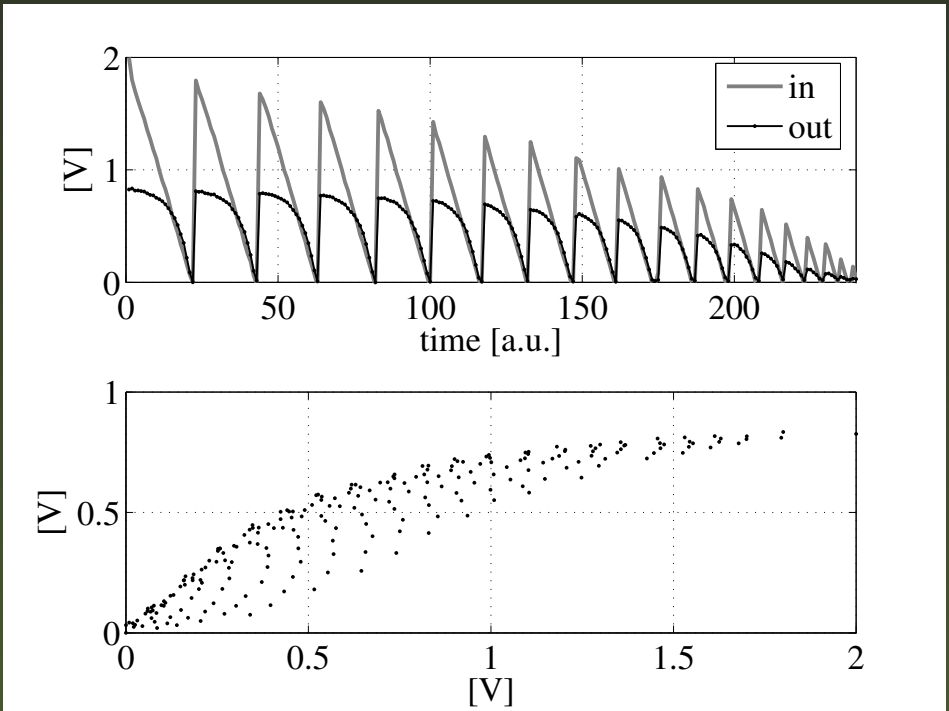

Experimental results: sinusoid

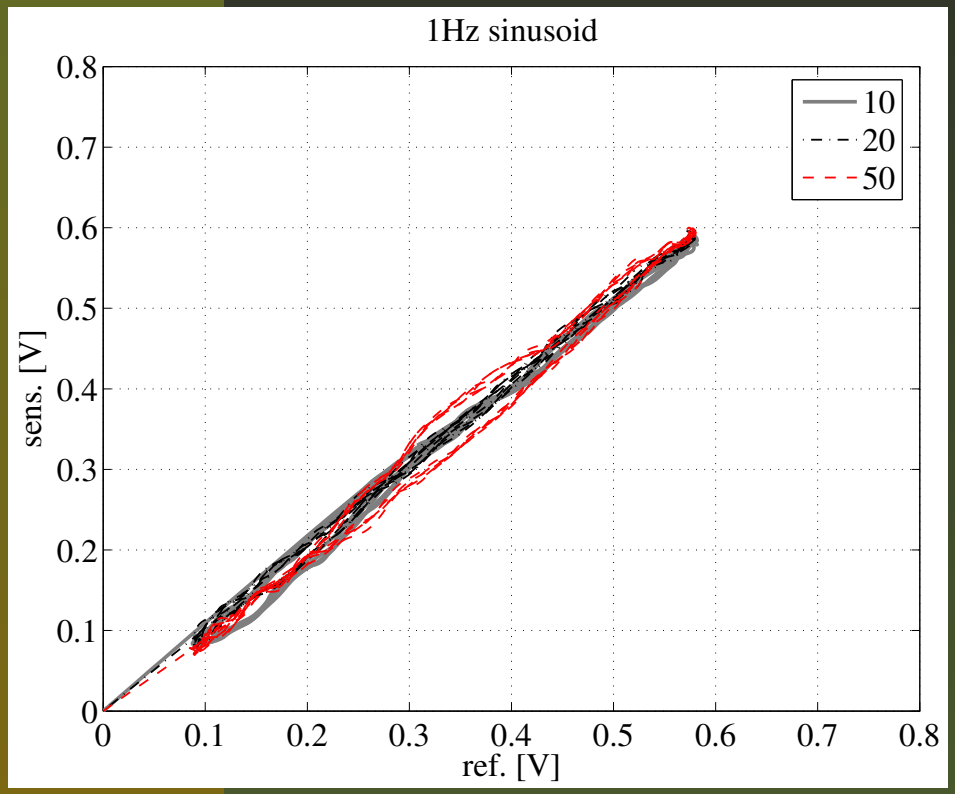

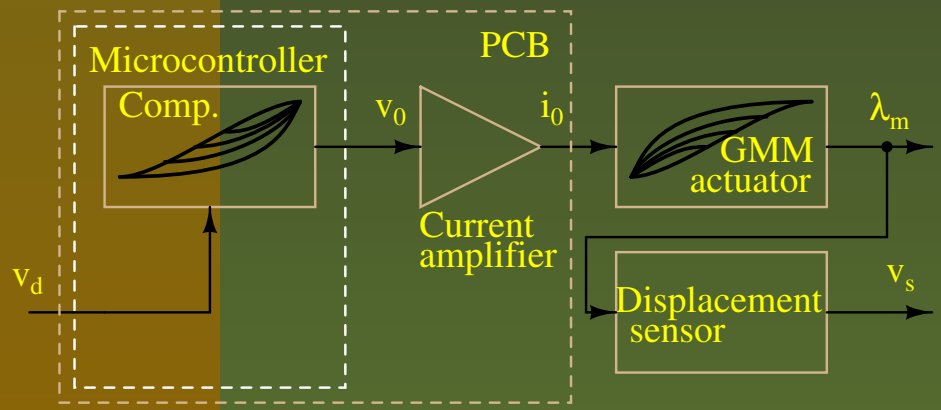

- open loop configuration
- identification matrices: 10x10, 20x20 and 50x50 without interpolation
- 1Hz sinusoid reference

Experimental results: sinusoid

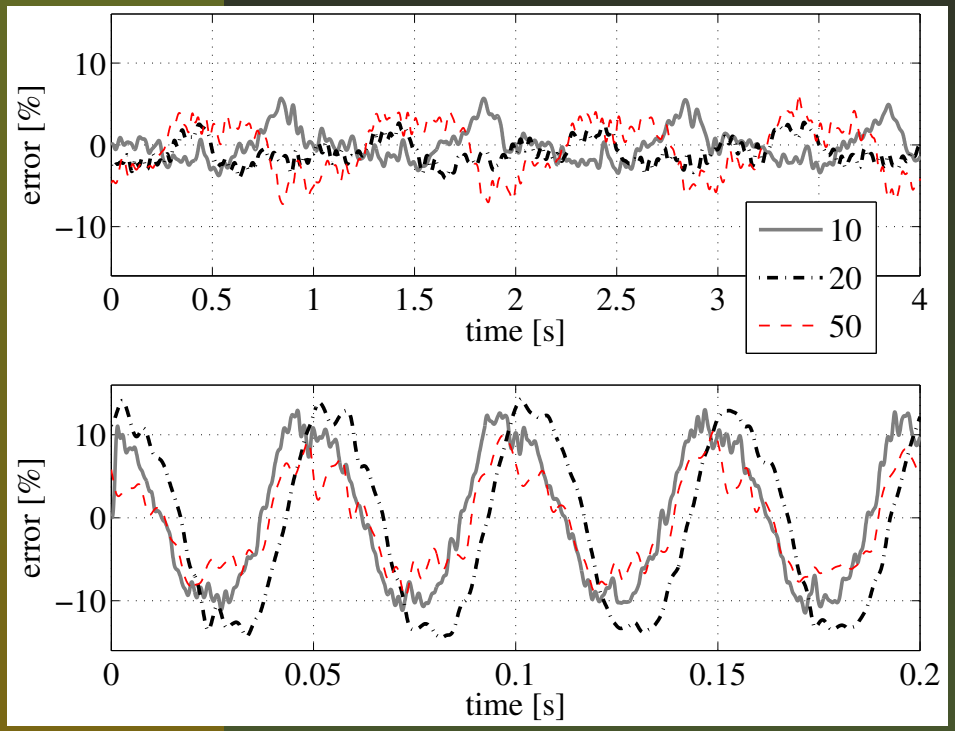

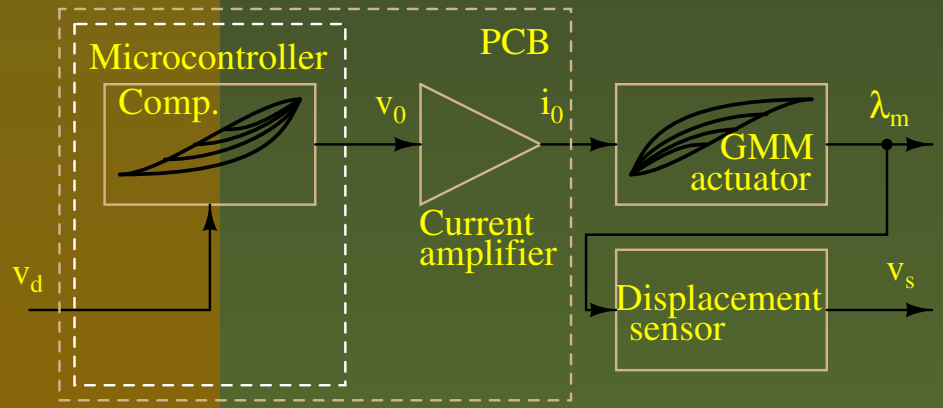

- open loop configuration
- identification matrices: 10x10, 20x20 and 50x50 without interpolation
- 1Hz and 20Hz reference

Experimental results: AM-like signal

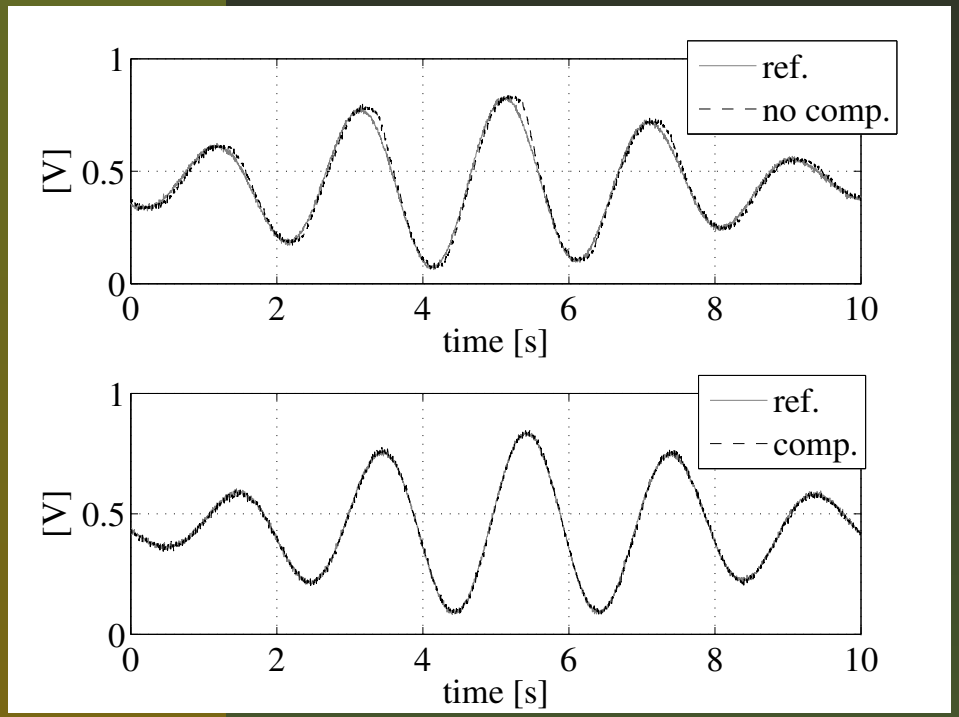

- closed loop configuration
  - comp. vs no comp.
- 10x10 identification matrix
- tracking is good

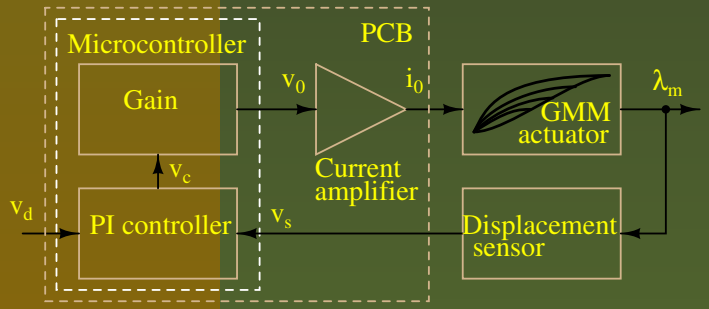

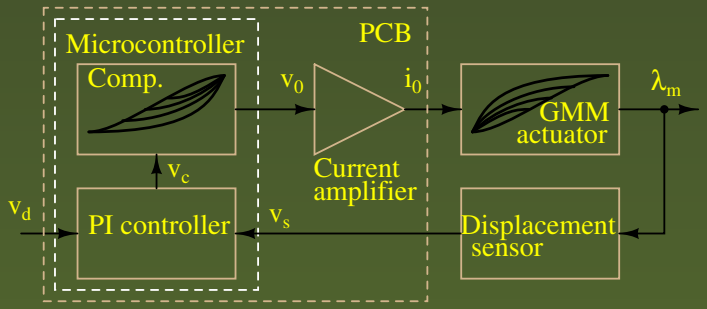

Experimental results: AM-like signal

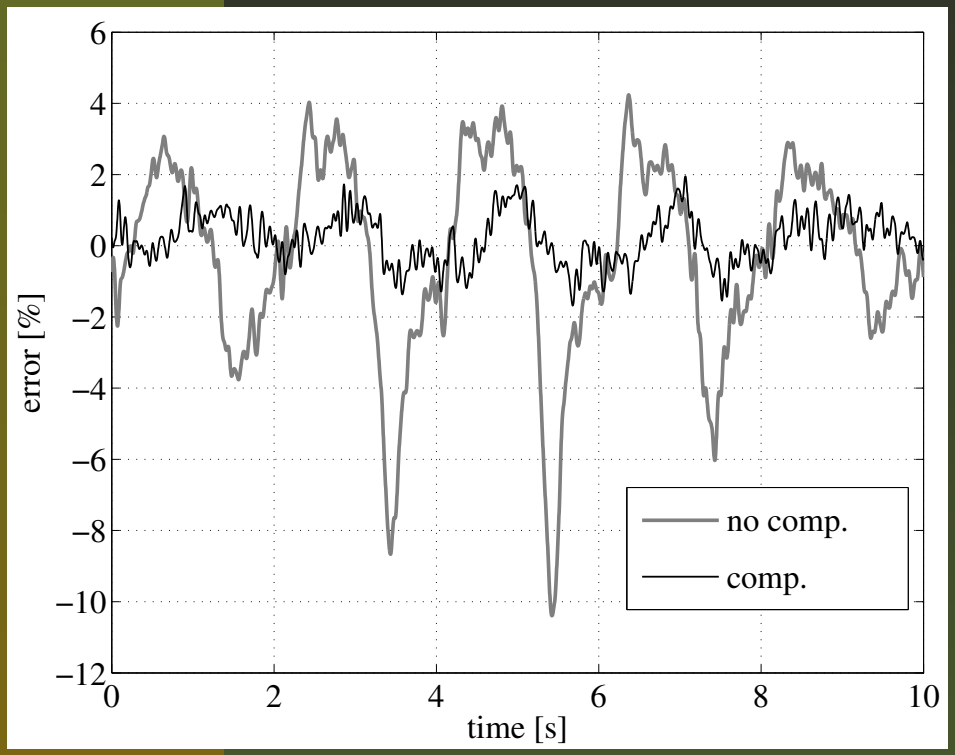

- closed loop configuration
  - comp. vs no comp.
- 10x10 identification matrix
- compensated case shows halved error

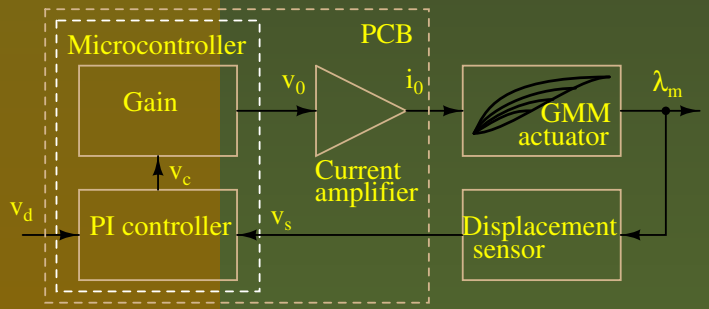

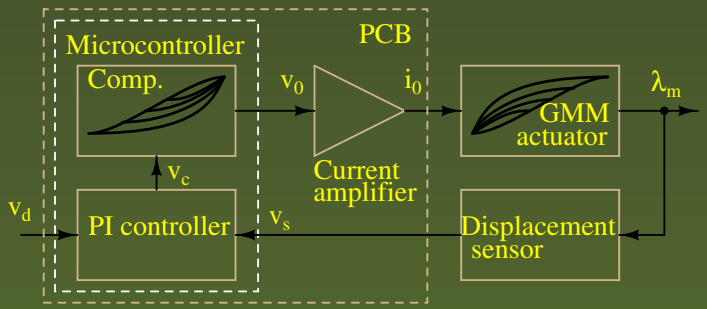

A magnetic field sensor proof

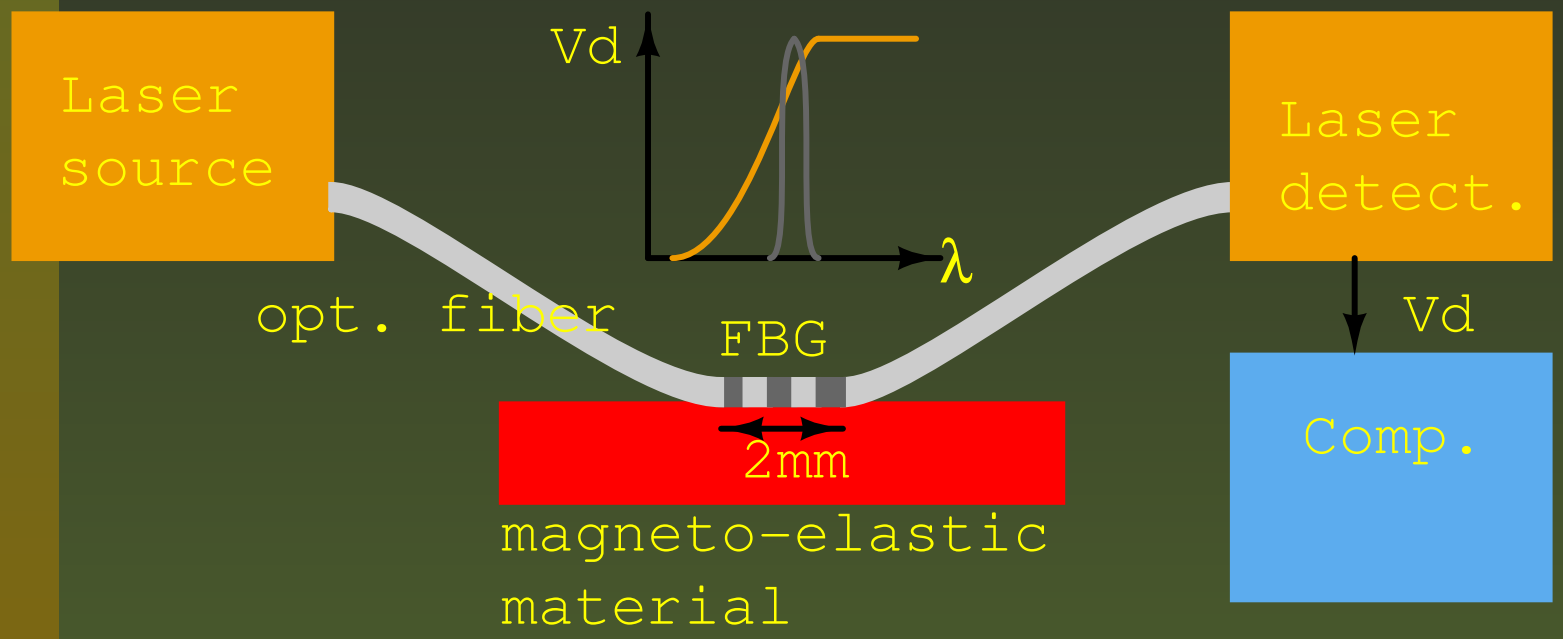

A magnetic field sensor proof

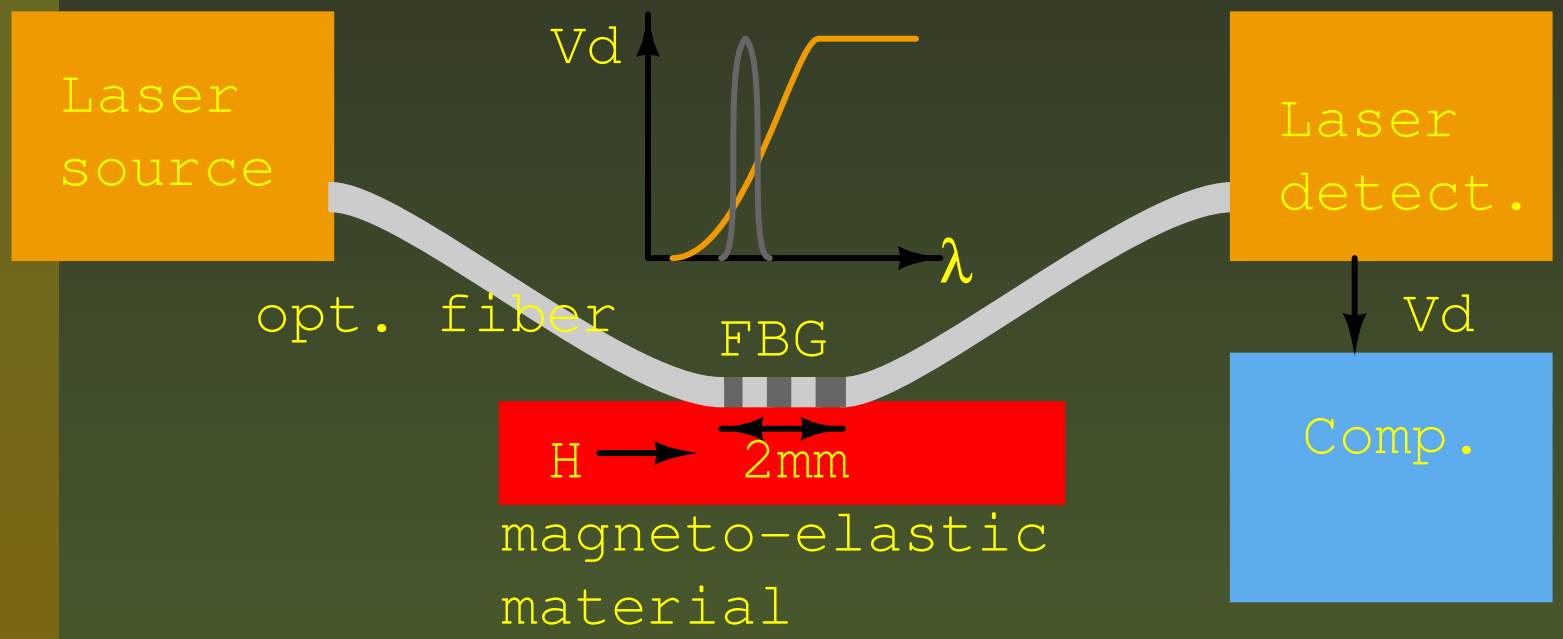

A magnetic field sensor proof

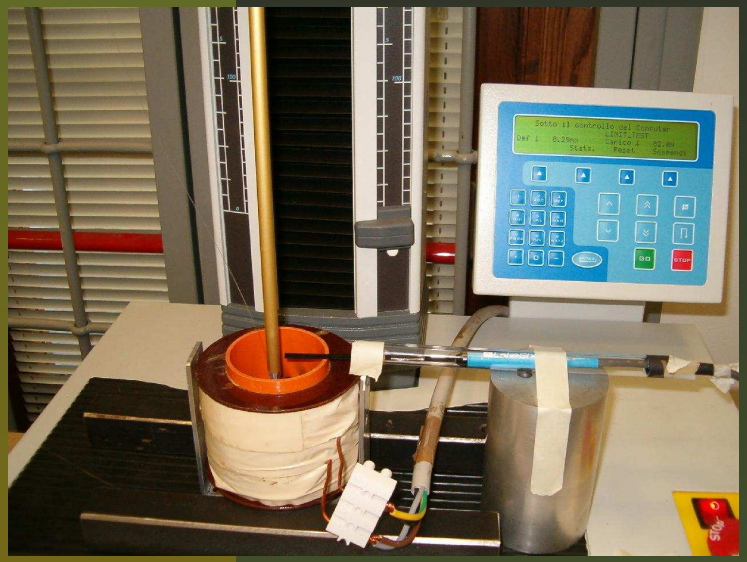

- optic Fiber Bragg Gratings (FBG) as strain sensor: $\Delta\lambda/\lambda \propto \varepsilon$.
- compression test machine as preload
- 360 coils air solenoid as *unknown* magnetic field source
- 4.7mm diameter and 20mm length Terfenol-D rod

Experiment: identification input

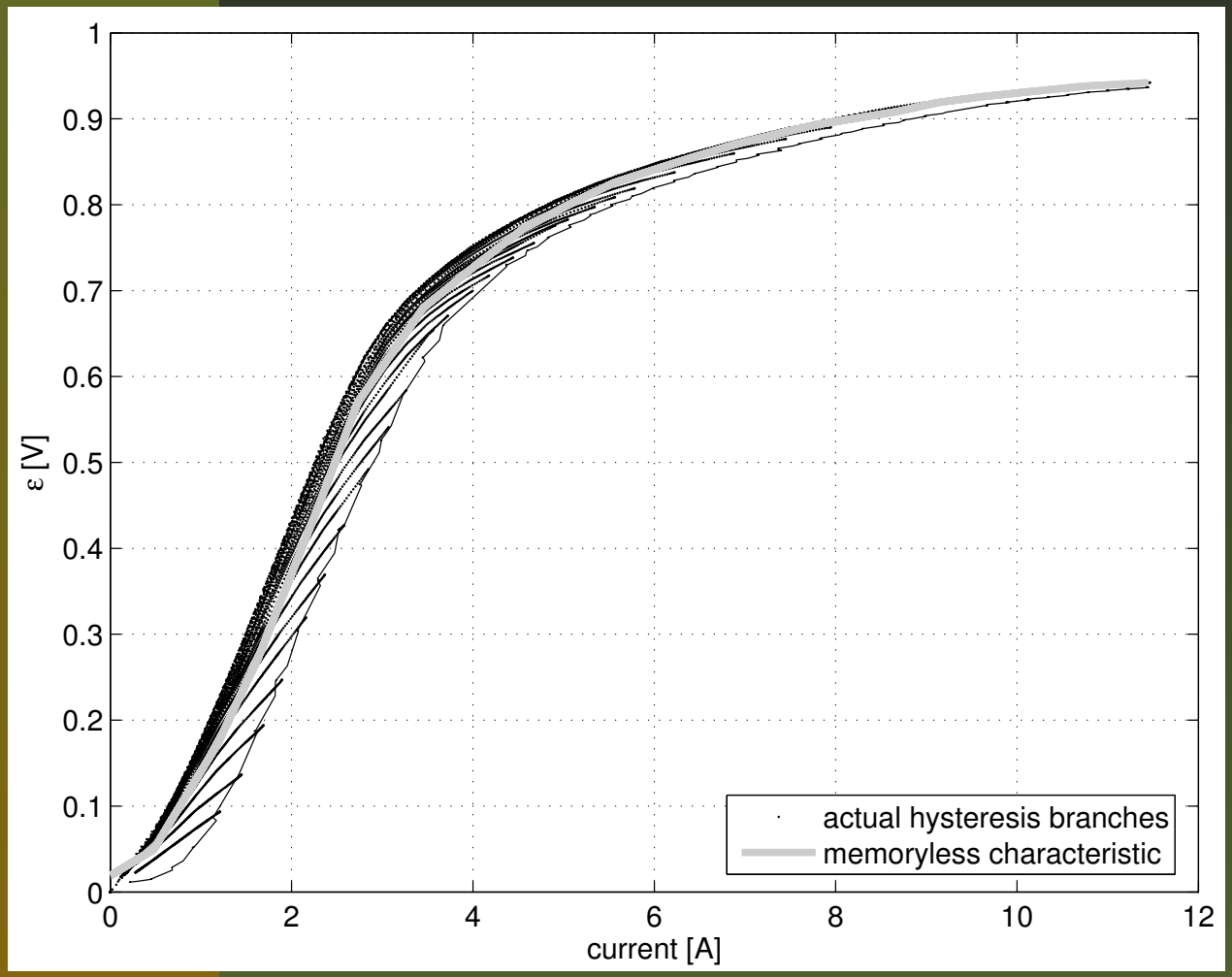

- f.o.r. curves
- memoryless characteristic as reference

Experiment: identification input

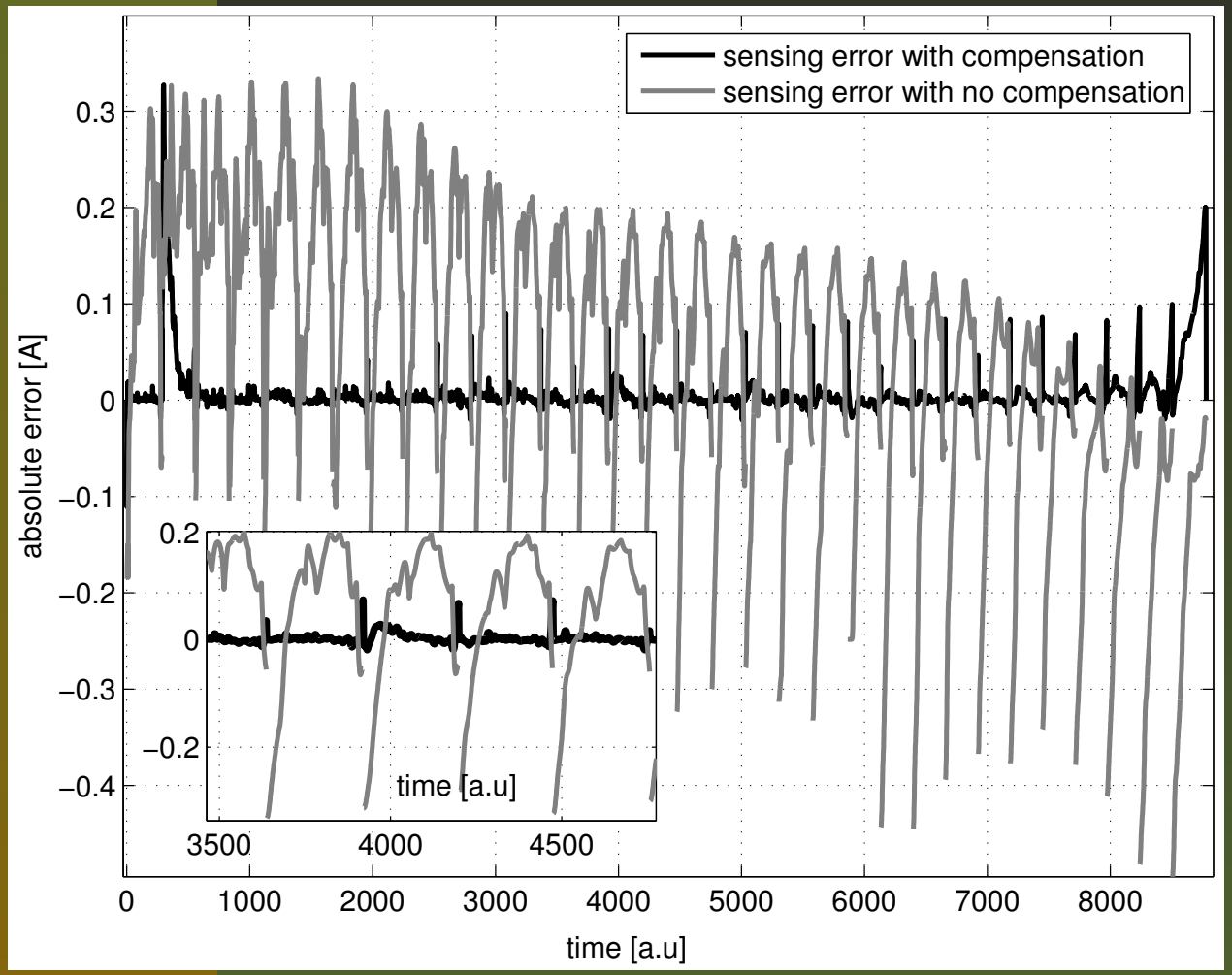

- f.o.r. curves
- the absolute error is much lower on the identification input

Experiment: arbitrary input

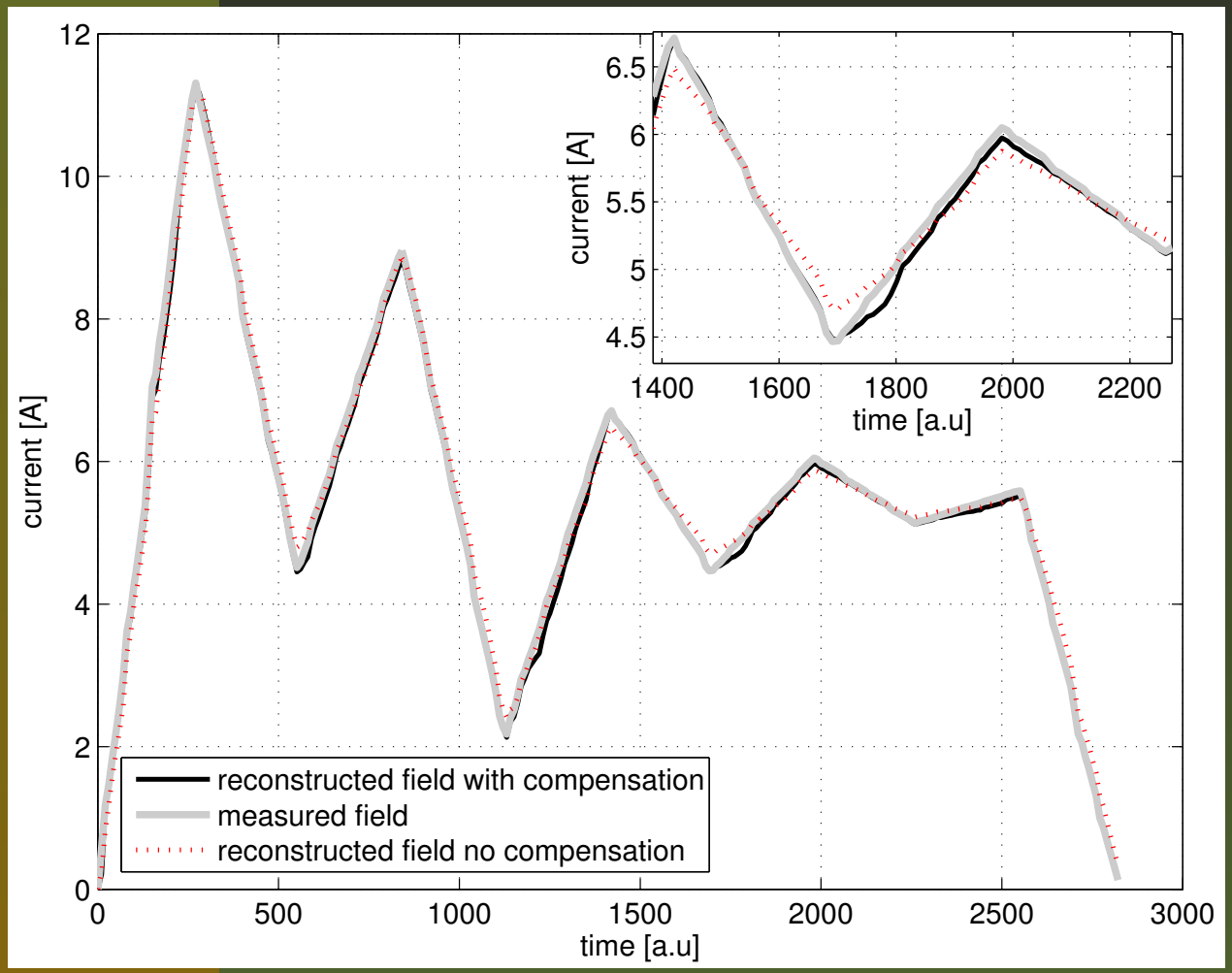

- arbitrary input

Experiment: arbitrary input

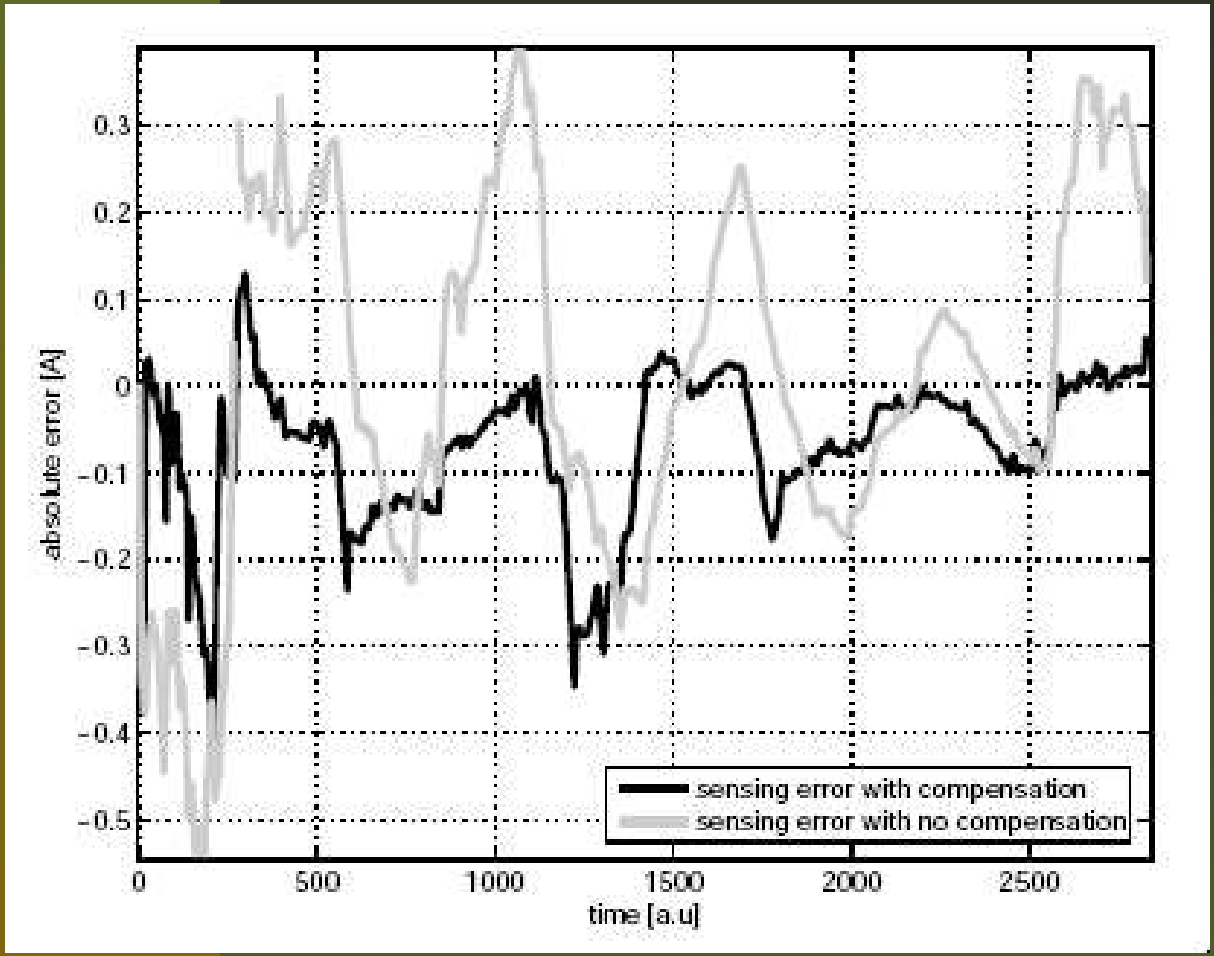

- compensated case shows halved error

Collaborations

- Optoelectronic group: C. Ambrosino, S. Campopiano, A. Cusano, A. Cutolo
- Automatic group: C. Natale, S. Pirozzi.
- Elettrotechnic group: C. Serpico, M. d'Aquino
- V. Basso, M. Pasquale, C. Sasso
- A. Adly

Conclusions

- Magneto-elastic materials can be used in actuators and sensors
- A phenomenological model can compensate the hysteresis $\Rightarrow$ better performance
- A linear actuator application has been presented
- A linear magnetic field sensor application has been presented

References Thank you!

- C. Natale, F. Velardi, C. Visone, Physica B: Condensed Matter 306 (2001) 161.
- A. Cavallo, C. Natale, C. Pirozzi, C. Visone, IEEE Transactions on Magnetics 39 (2003) 1389.
- D. Davino, C. Natale, S. Pirozzi, C. Visone, Phenomenological dynamic model of a magnetostrictive actuator, Physica B: Condensed Matter, Volume 343, Issues 1-4, 1 January 2004, pp. 112-116.
- D. Davino, C. Natale, S. Pirozzi, C. Visone, Rate-dependent losses modelling for magnetostrictive actuators, J. Mag. and Mag. Mat., Vol. 272-276, Supplement 1, May 2004, pp. E1781-E1782.
- D. Davino, C. Natale, S. Pirozzi, C. Visone, A fast compensation algorithm for real-time control of magnetostrictive actuators, J. Mag. and Mag. Mat., vol. 290-291, (2005).
- D. Davino, A. Giustiniani, V. Vacca, C. Visone, Embedded hysteresis compensation and control on a magnetostrictive actuator, IEEE Transactions on Magnetics, in press.

- Two contributed oral presentations to the INTERMAG ’06 conference, San Diego, 8-12 may 2006.

Application to SRF

www.energeninc.com

Motor Specifications

Travel:	50 mm
Resolution:	better than 0.1 μm
Operating Temp:	2.1 K
Force:	4.4 - 13.3 kN
Speed:	0.1 mm/s

- coarse and fine tuning in a single device
- no sliding or rotating penetrations through the vacuum cryostat
- zero-power position lock-in

Systems with hysteresis

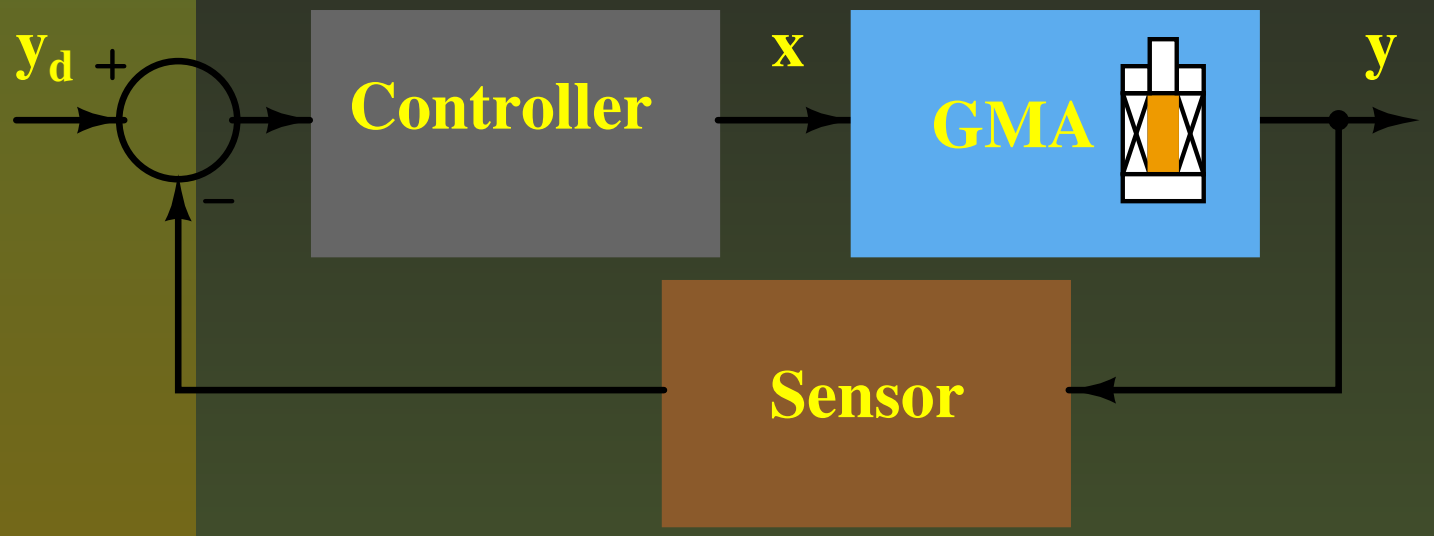

Systems with hysteresis

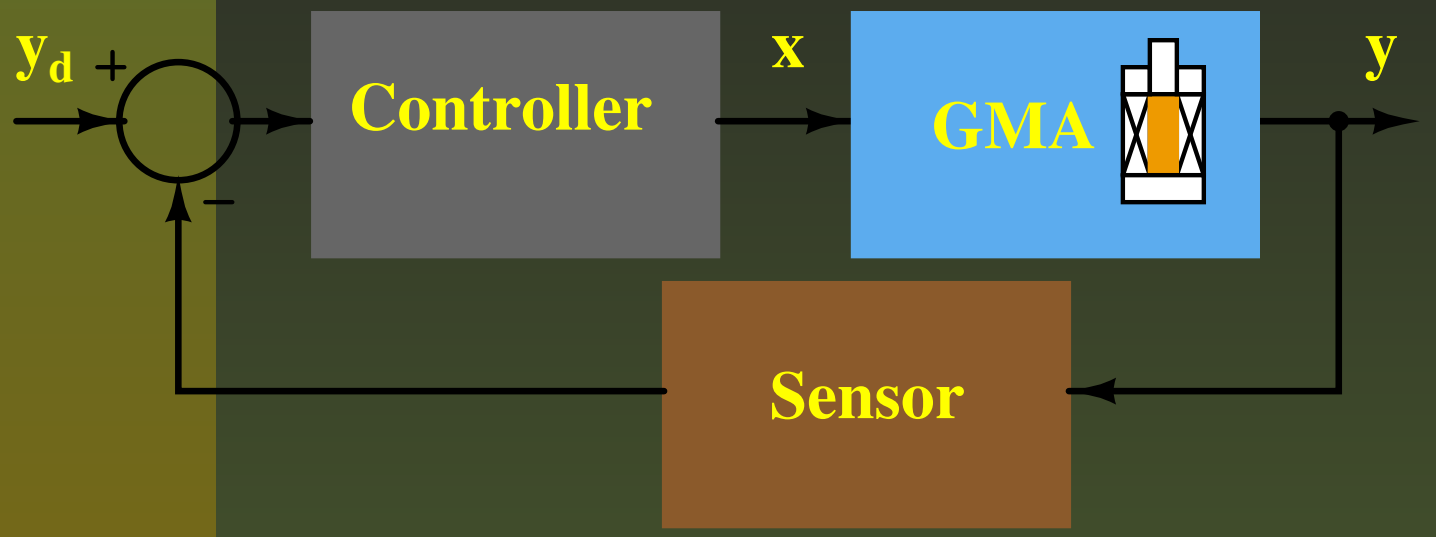

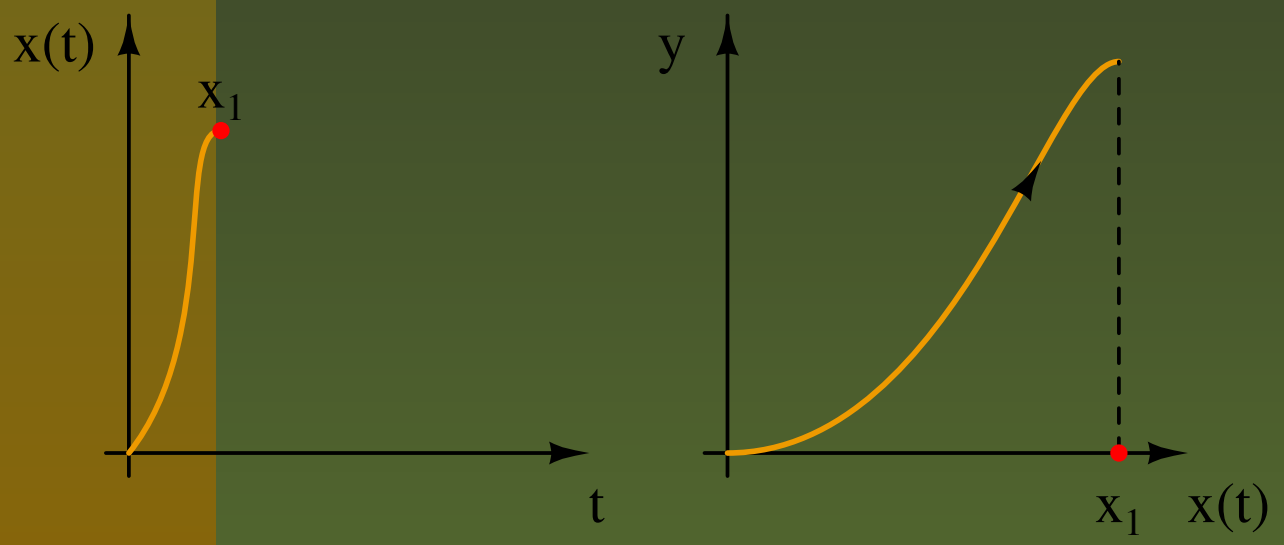

Systems with hysteresis

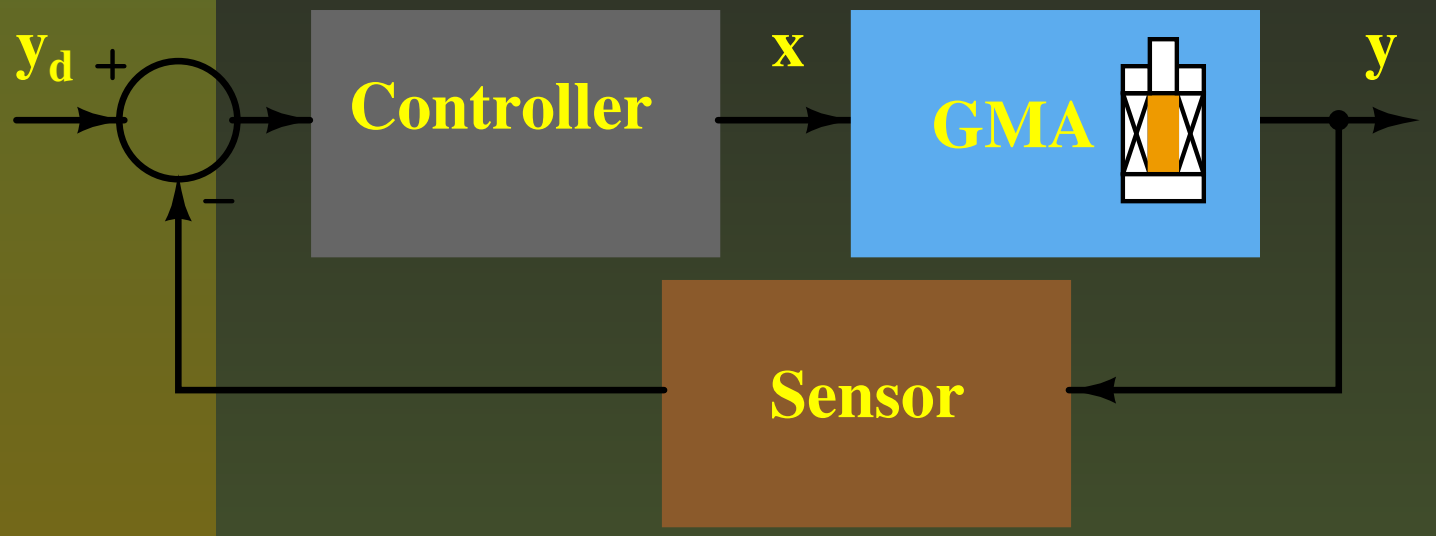

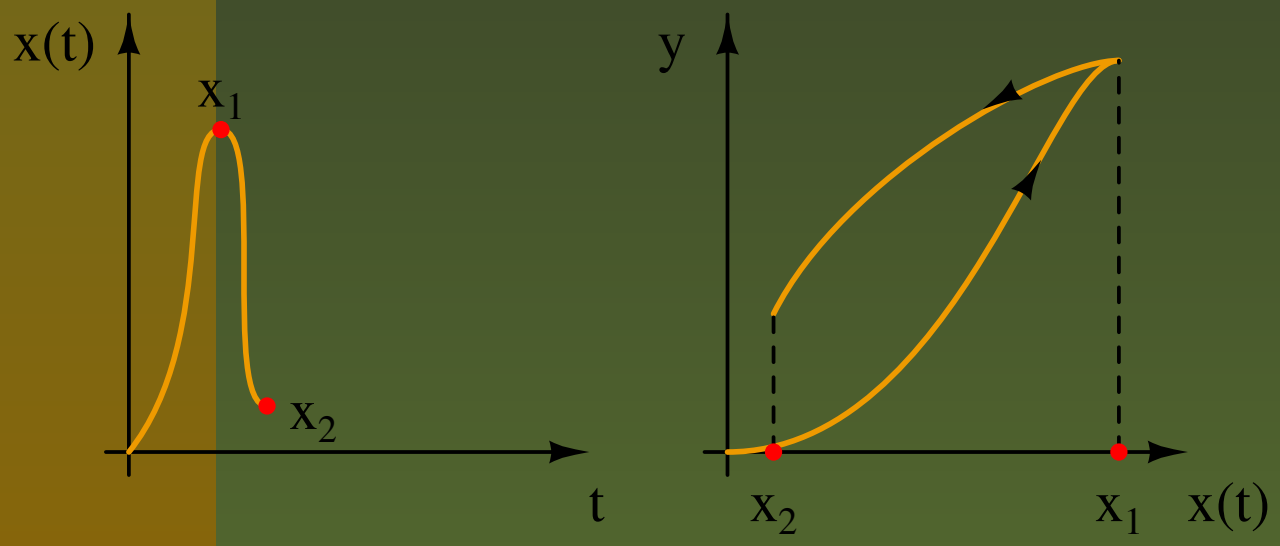

Systems with hysteresis

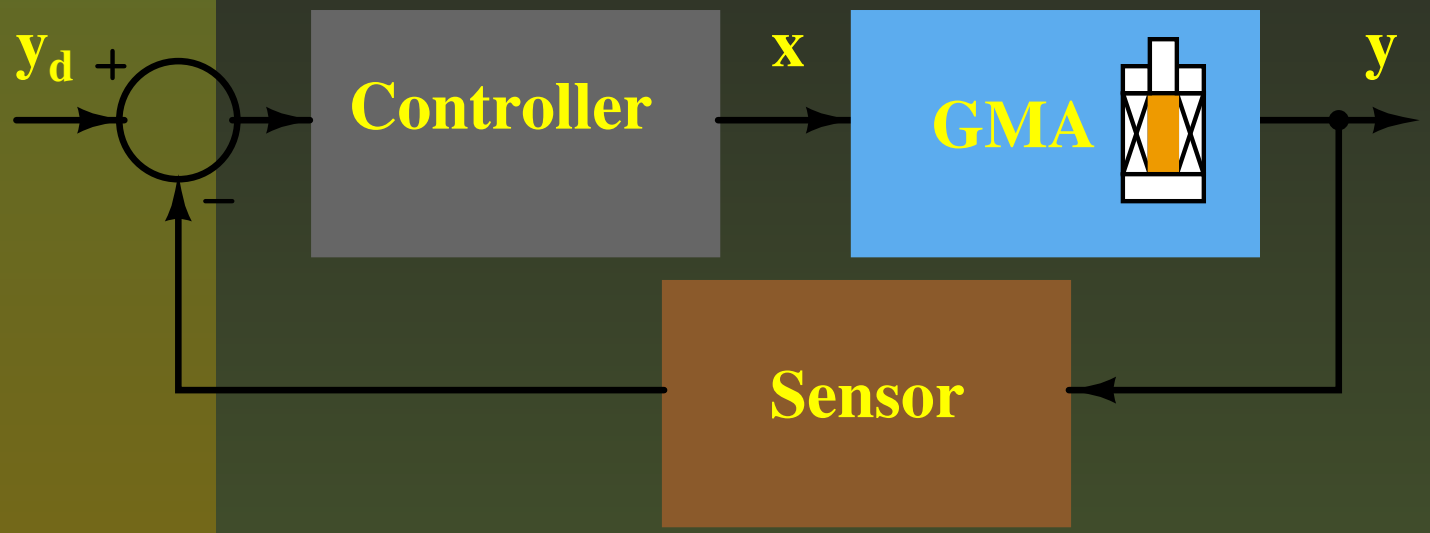

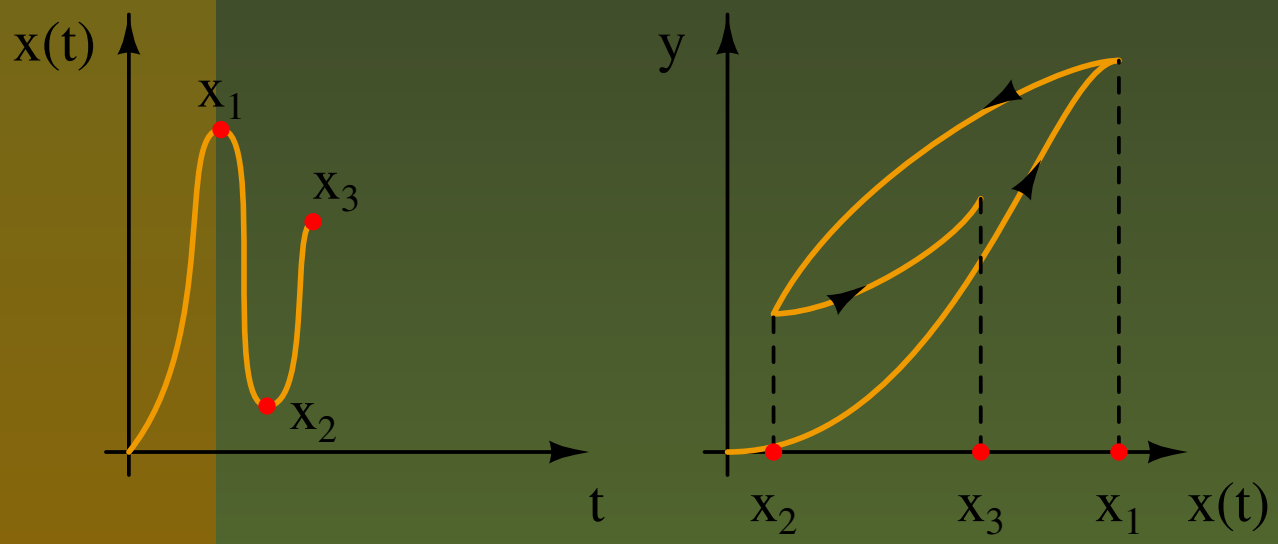

Systems with hysteresis

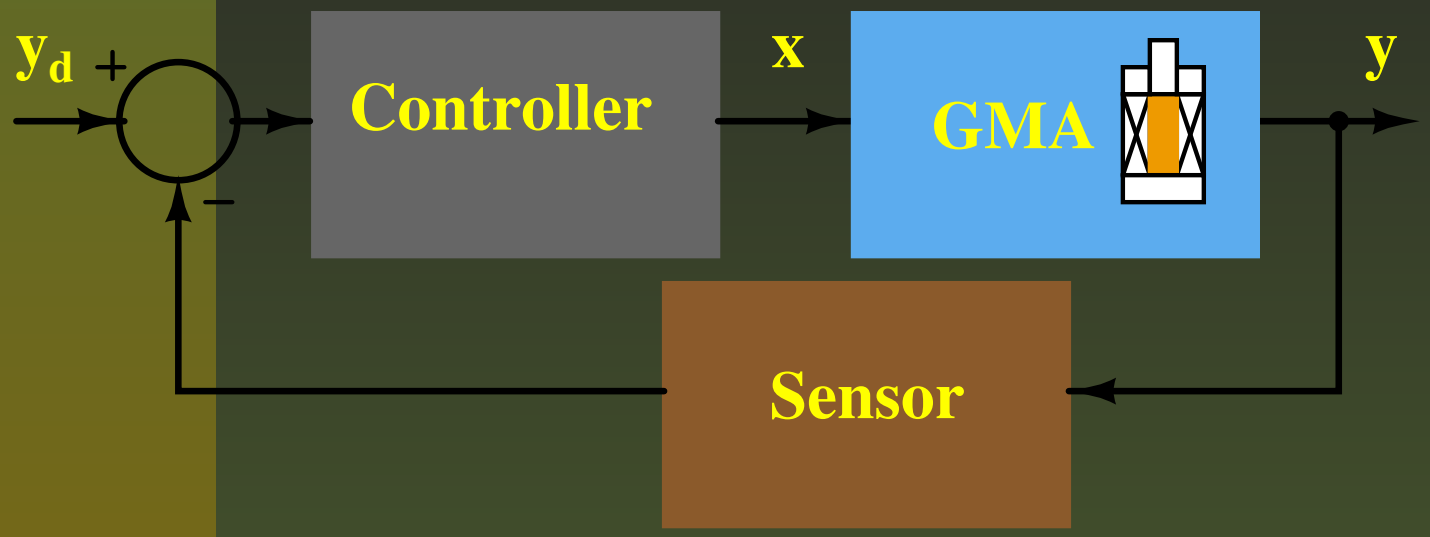

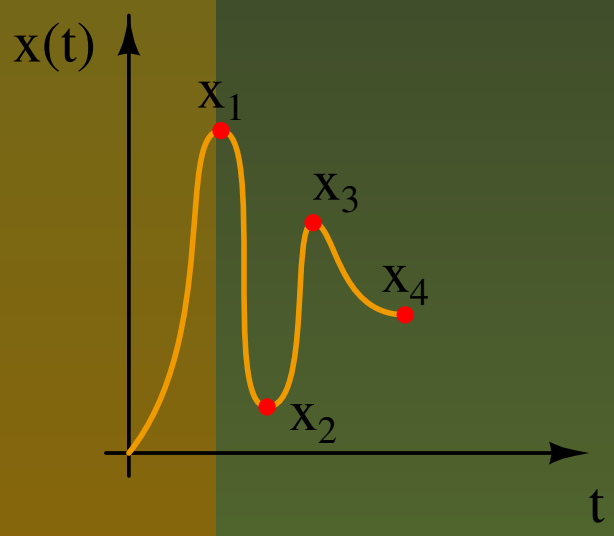

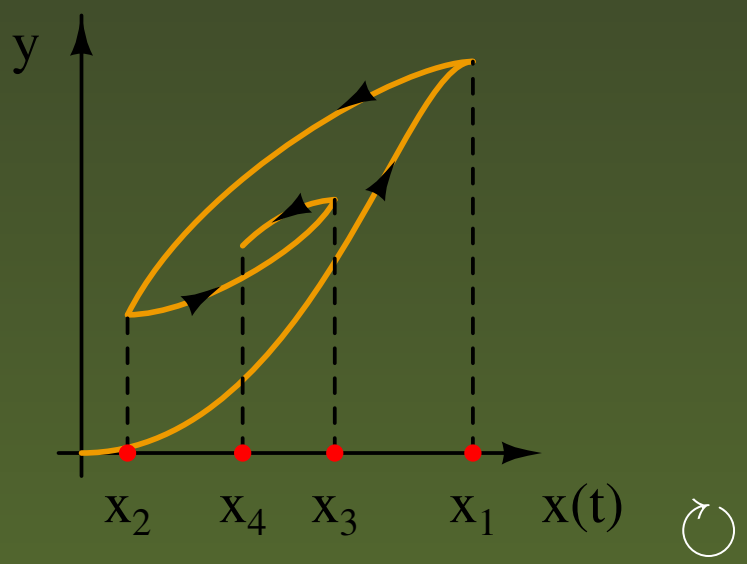

Systems with hysteresis

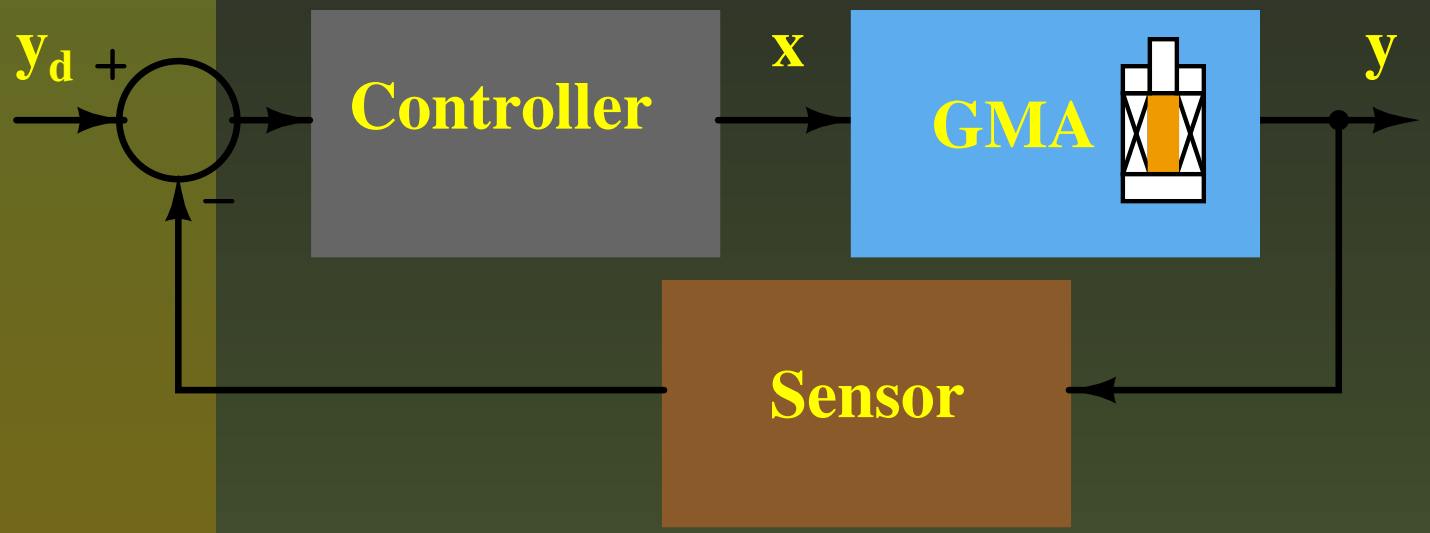

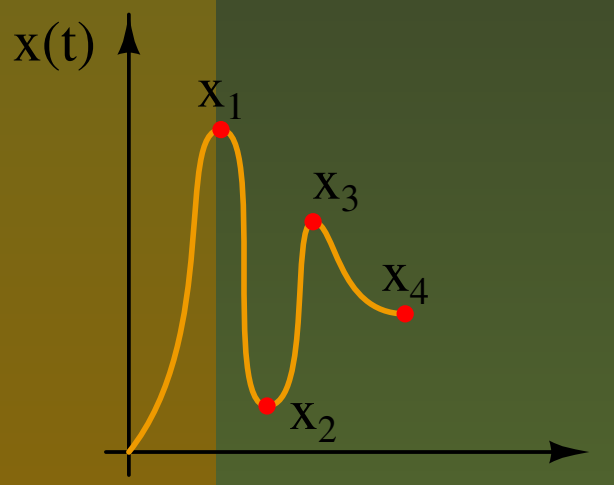

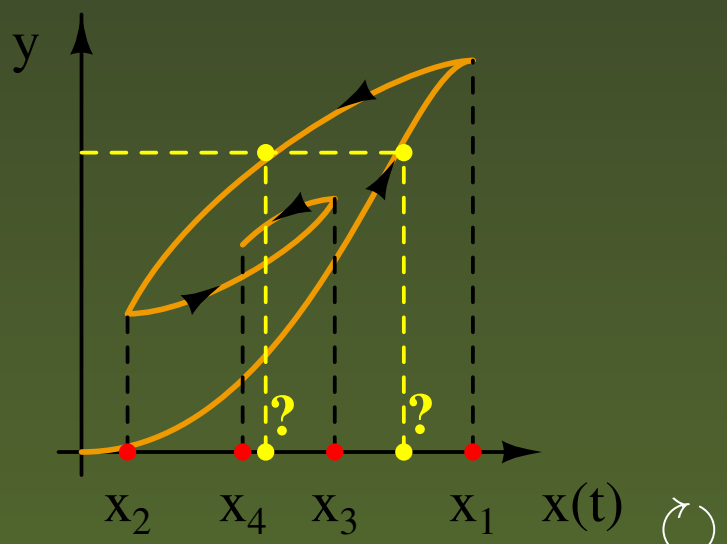

Smart materials comparison

AdaptaMat	Properties of smart actuator materials			
	Bulk Piezo (PZT)	Multilayered piezo	Magnetostrictive Terfenol-D	MSM (Ni-Mn-Ga)
Control Field	Electric	Electric	Magnetic	**Magnetic**
Max. strain ε (μm/mm), linear	**0.3**	**1.25**	**1.6**	**100**
Work output, $\sigma_{bl} \times \varepsilon_f$ (MPa $\times$ μm/mm)*	6	25	112	**300**
Young's modulus (GPa)	48-74	45-62	25-35	**7.7****
Tensile strength (MPa)	5-50	5-30	28	
Compressive strength (MPa)	60	50	700	**700**
Curie Temperature (°C)	200-350	200-350	380	**103#**
Max. operating temperature (°C)	100	100	150	**70#**
Resistivity (Ω·m)	10^{10}	10^{10}	58×10^{-8}	**80×10^{-8}**
Relative permittivity	800-2400	800-2400	NA	**NA**
Relative permeability	1	1	3-10	**1.5-40**
Coupling factor (%)	75	70	75	**75**
Max. energy density (kJ/m^3)	2	18.5	27	**90**
Field strength for max. strain	2 MV/m	2 MV/m	240 kA/m	**400 kA/m**

* σ_{bl} : blocking stress (in MSM defined as the stress at which strain is 0.01 ε_f), ε_f : maximum strain
** Measured when MSM sample oriented at a single martensite variant
# can be increased by changing the proportion of Ni-Mn-Ga elements