Z/n of RHIC INJECTION KICKER

H. Hahn

TRANSMISSION LINE KICKER

rise time	90 ns
characteristic impedance	25 Ω
propagation *v/c*	0.07
length	4×1.12 m
Z/n (< 1 GHz)	0.22 Ω with ceramic beam tube
	0.14 Ω without "
ceramic tube o.d / i.d.	47.6 / 41.3 mm
Z (1 - 3 GHz)	< 2.5 kΩ
ring beam tube cut off	~3.3 GHz

Unconventional Design

SLAC: Replace Capacitors by dielectric blocks
difficult implementation & abandoned at SLAC (Cassel)
Elegant, cost effective (Forsyth et al., Proc. PAC 1995, p. 1921)

PROBLEMS with BNL KICKER:

-Electric breakdown,
solved by fabrication method and QA
(Hahn et al., Proc. PAC 1997, p. 213)

-Sharp resonances in Z/n (Mane et al., Proc PAC 1995, p. 3134)

trapped mode resonances in dielectric blocks
eliminated by geometrical change
(Hahn et al., Proc. PAC 1997, p. 1706,
Reports AD/RHIC/RD - 95 & 105 & 111)

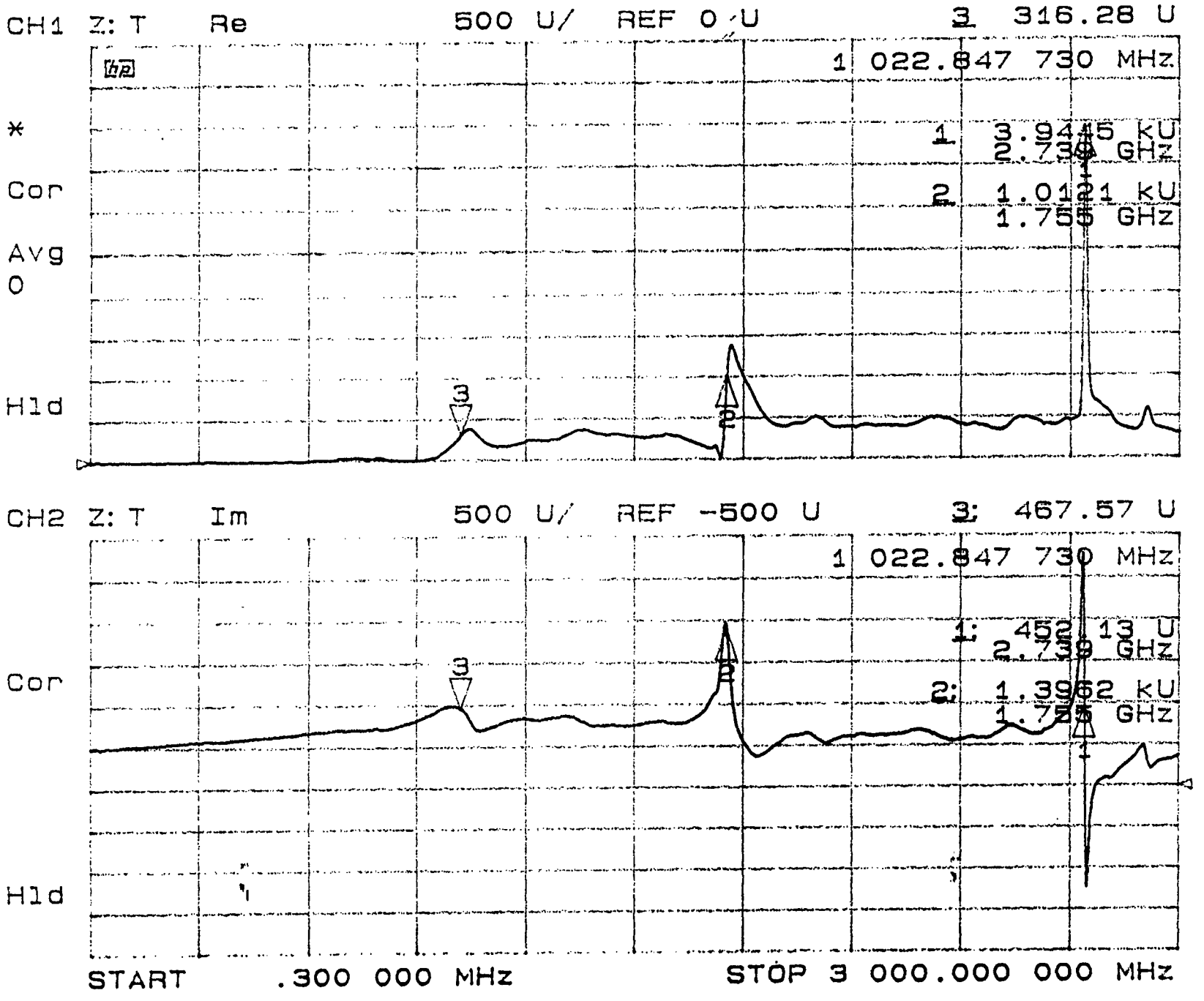

Fig. 3. Coupling impedance of ferrite-dielectric kicker

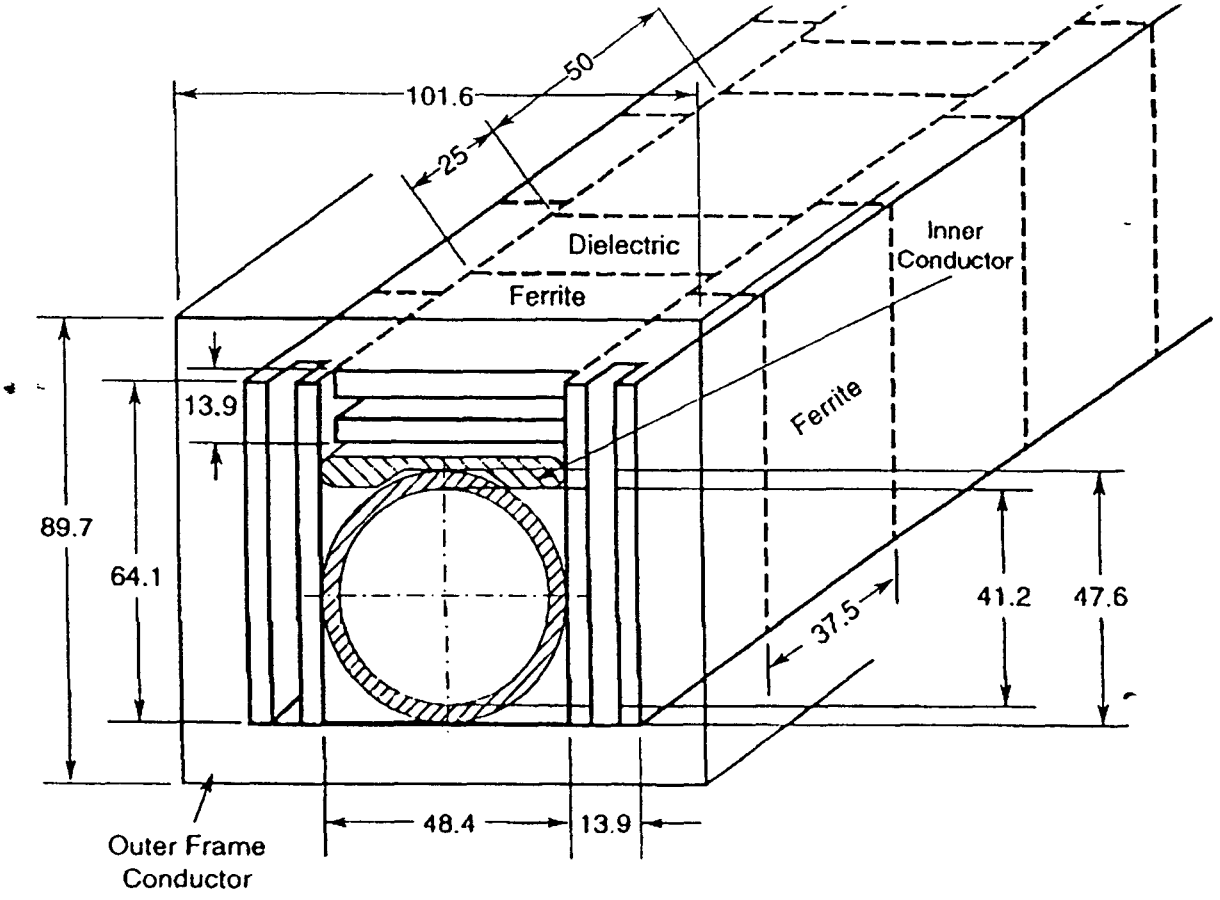
101.6
50
25
Dielectric
Ferrite
Inner
Conductor
Ferrite
13.9
89.7
64.1
41.2
47.6
37.5
48.4
13.9
Outer Frame
Conductor

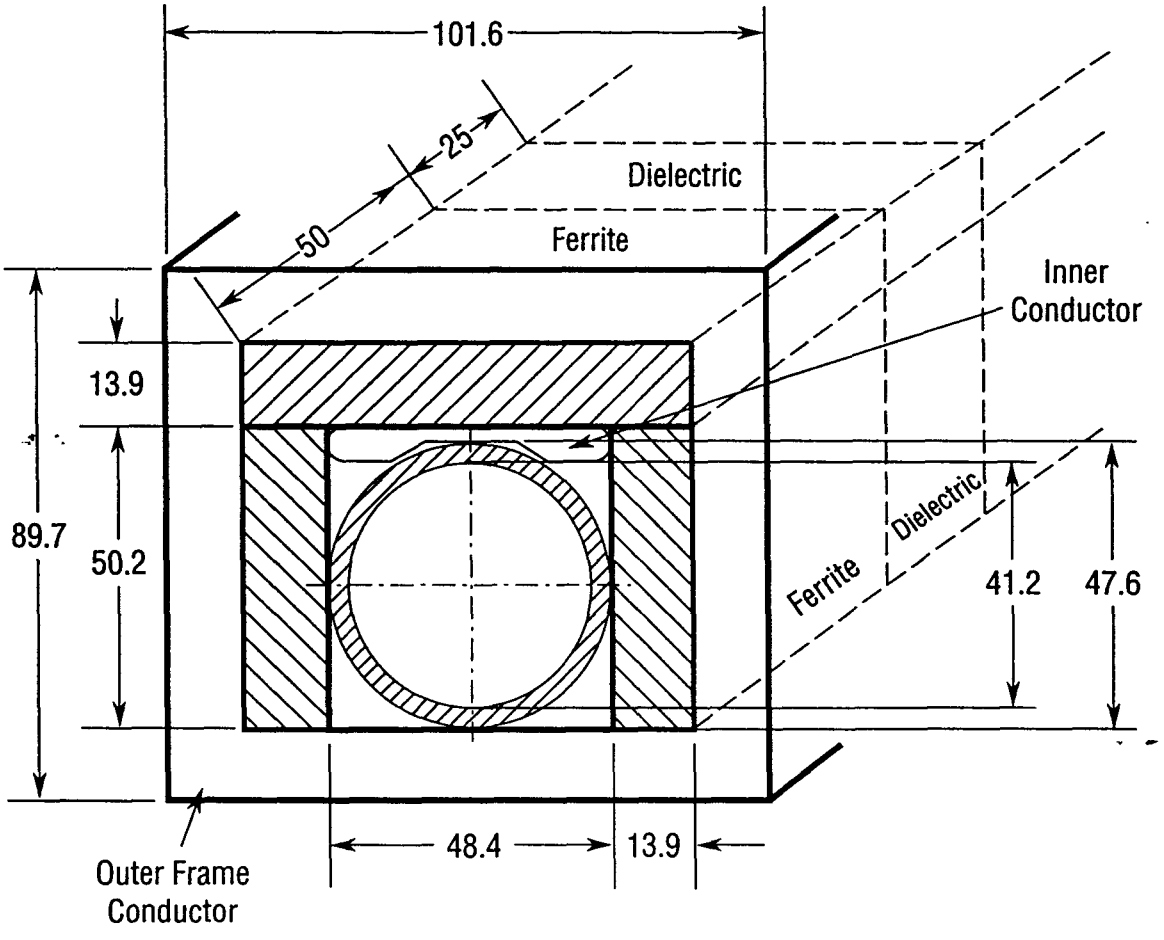
101.6
25
Dielectric
50
Ferrite
Inner
Conductor
13.9
89.7
50.2
Dielectric
Ferrite
41.2
47.6
48.4
13.9
Outer Frame
Conductor

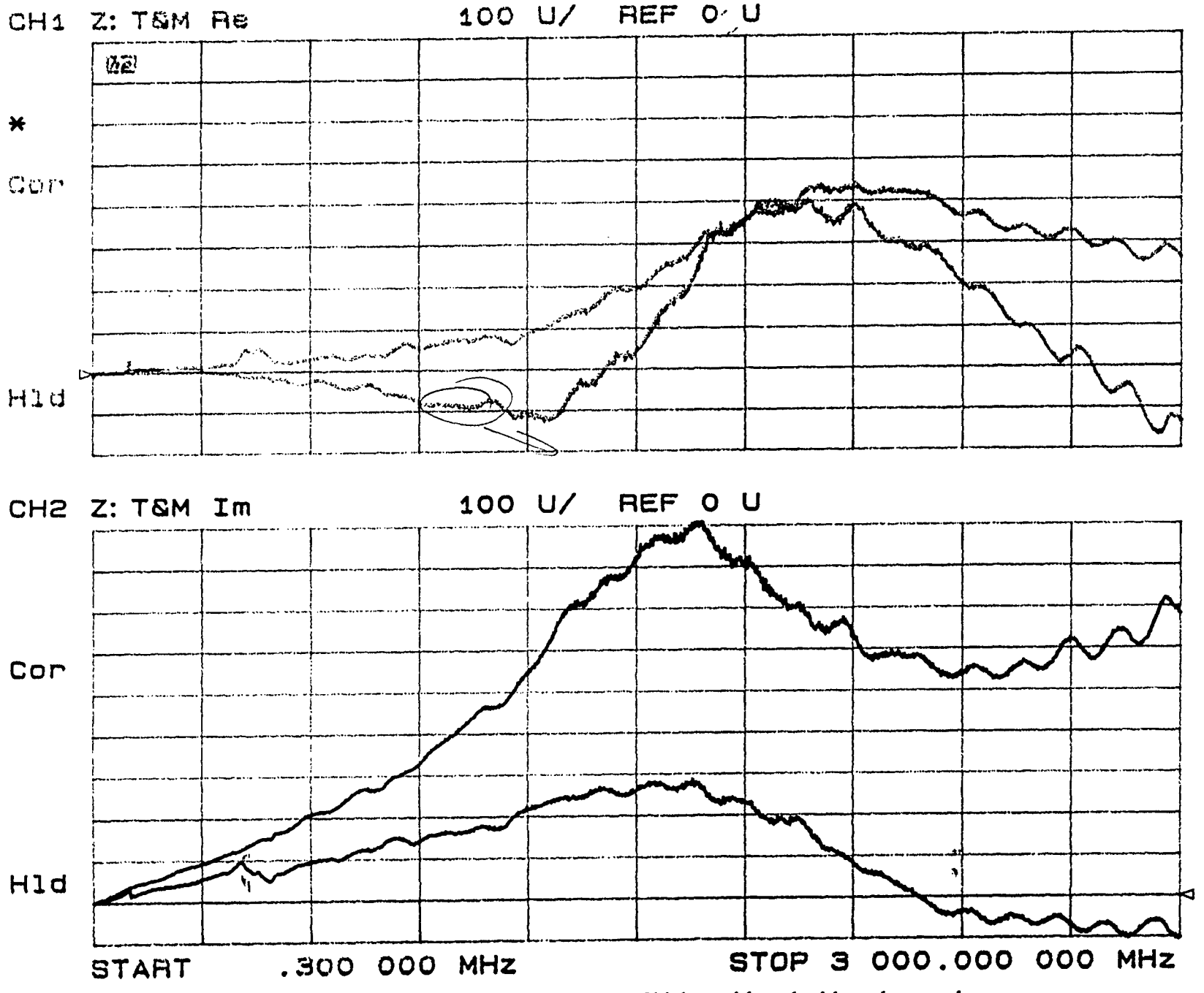

Fig. 11. Comparison of impedance of kicker with and without beam tube.

IMPEDANCE MEASUREMENT

"Standard " Wire Measurement

- (Faltens, Hartwig, Möhl, Sessler, Proc. 8th IHEAC, 1971, p.338)
  (Hahn & Pedersen, Report BNL 50870, 1978)

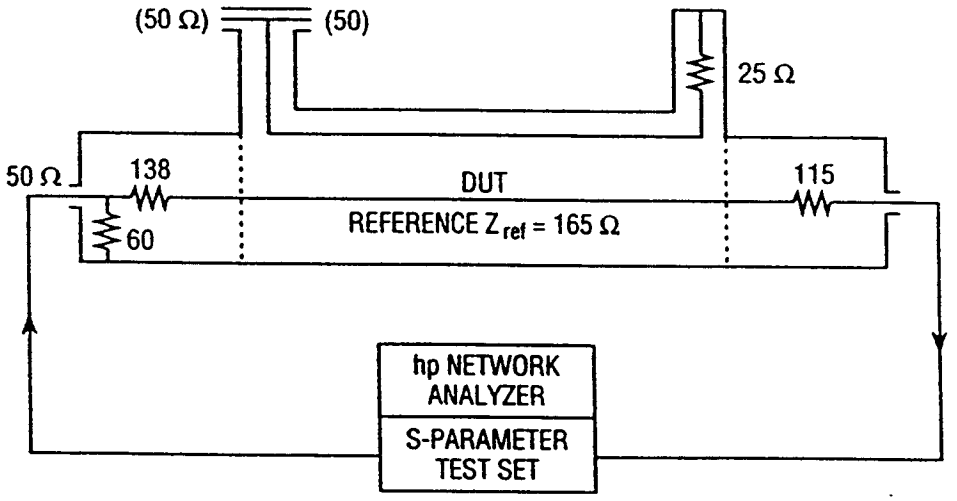

Resistive matching
(Ratti, EPAC 1994, vol.2, p. 1262)

replaces TRL (through, reflect, line) calibration
(Mane et al., loc.cit.)

INTERPRETATION of forward scattering coefficient S21DUT (S21ref =1):

DIRECT from HP network analyzer:

$$Z_{hp} = 2\,Z_{ref}\frac{\left(1 - S_{21DUT}/S_{21ref}\right)}{\left(S_{21DUT}/S_{21ref}\right)}$$

ACCURATE results via log-formula
(Walling, McMurry, Neuffer, Thiessen, Nucl. Instr. Meth, vol A281, p.433, 1989)
(for detailed derivation: Hahn et al, AD/RHIC/RD-95)

$$Z_{\log} = -2\,Z_{ref}\ln\frac{S_{21DUT}}{S_{21ref}}$$

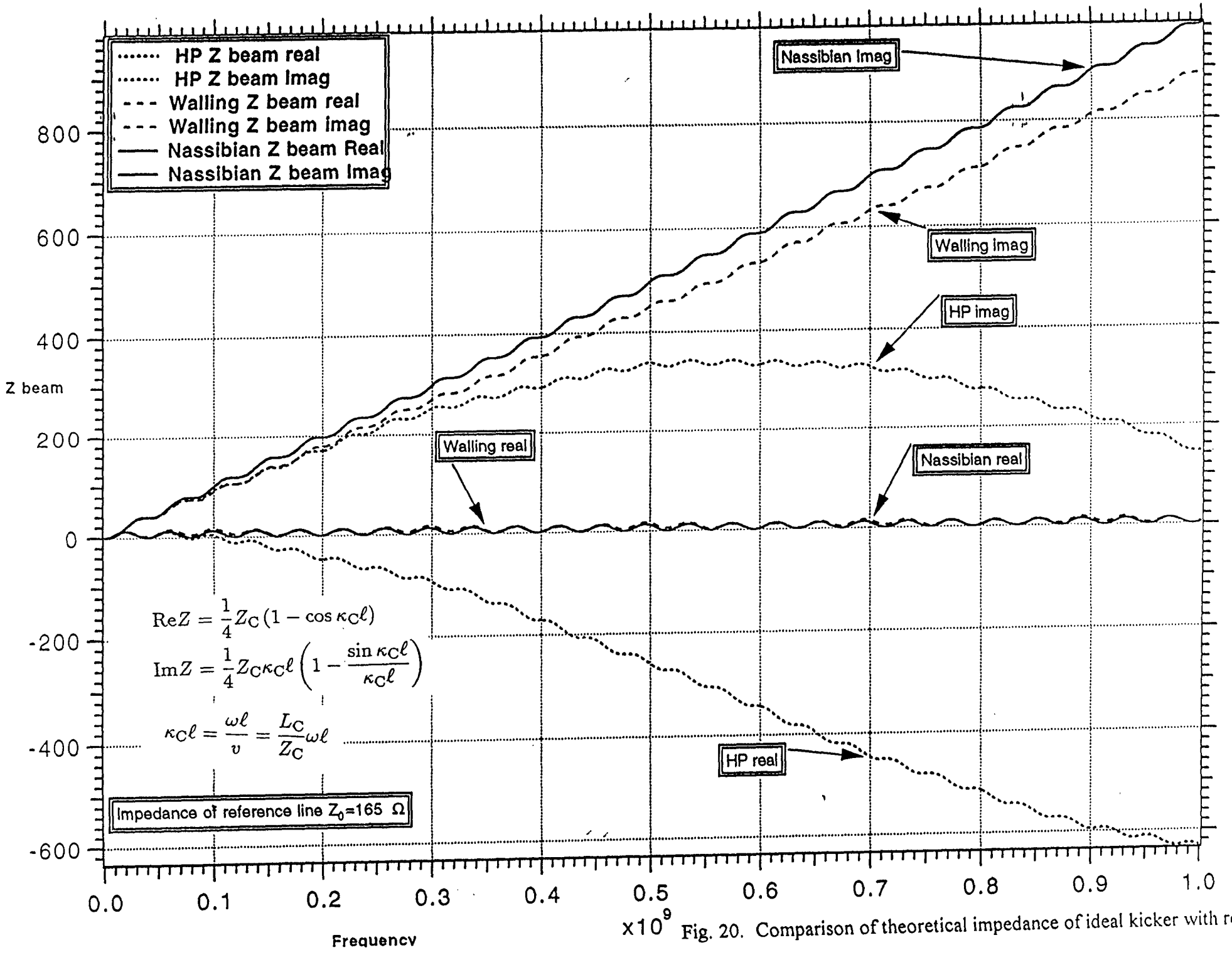

Fig. 20. Comparison of theoretical impedance of ideal kicker with resul

Z/n RESULTS

Kicker w.o. ceramic beam tube

			Half Length		Ring
f (MHz)	n	S_{21DUT}	Z_{hp} (Ω)	Z_{log} (Ω)	$\lvert Z/n \rvert$ (Ω)
100	1279	0.986 exp (−j 3.79°)	4.06 + j 22.5	4.69 + j 21.8	0.139
300	3837	0.937 exp (−j 10.47°)	16.5 + j 65.1	21.4 + j 60.3	0.133
600	7673	0.896 exp (−j 20.56°)	15.0 + j 131.6	36.1 + j 118.4	0.129
900	11510	0.787 exp (−j 29.54°)	35.5 + j 210.6	79.2 + j 170.2	0.130

Kicker with ceramic beam tube

			Half Length		Ring
f/MHz	n	S_{21DUT}	Z_{hp}(Ω)	Z_{log}(Ω)	$\lvert Z/n \rvert$ (Ω)
100	1279	0.974 exp (−6.50°)	6.59 + j 39.0	8.54 + j 37.4	0.24
300	3837	0.948 exp (−15.57°)	5.41 + j 95.1	17.6 + j 89.7	0.19
600	7673	0.889 exp (−34.07°)	−23.0 + j 211.6	38.7 + j 196.2	0.22
900	11510	0.081 exp (−52.14°)	−78.5 + j 331.3	73.4 + j 300.3	0.21

"Low-frequency" approximation (Zotter, Part Acc, vol 1, p.311,1970
Piwinski, 1977 PAC, NS 24, p.1364
Kurrenoy, 1993 PAC, vol 5, p.3420
Hahn, AD/RHIC/RD-105)

$$Z_K \approx Z_{K0} + j\frac{\omega l_K}{2\pi}\left(1-\frac{1}{\epsilon}\right)\ln\frac{r_D}{r_B}$$

Z (108 MHz)	theoretical	= j 12.7 Ω
	beam tube addition to kicker	j 15.6 Ω
	beam tube alone in frame	j 21.6 Ω

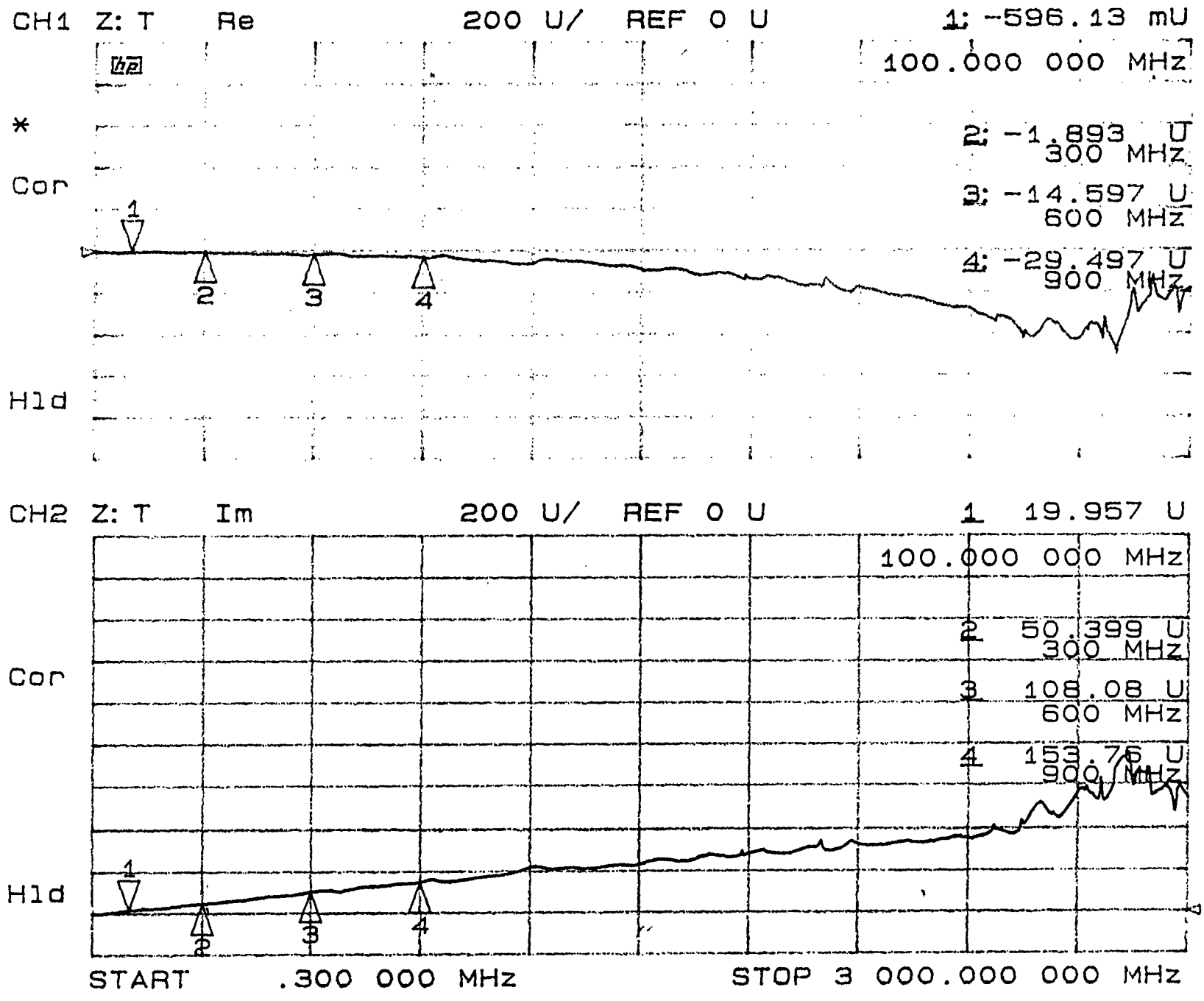

Fig. 13. *hp* coupling impedance of uncoated ceramic beam tube.

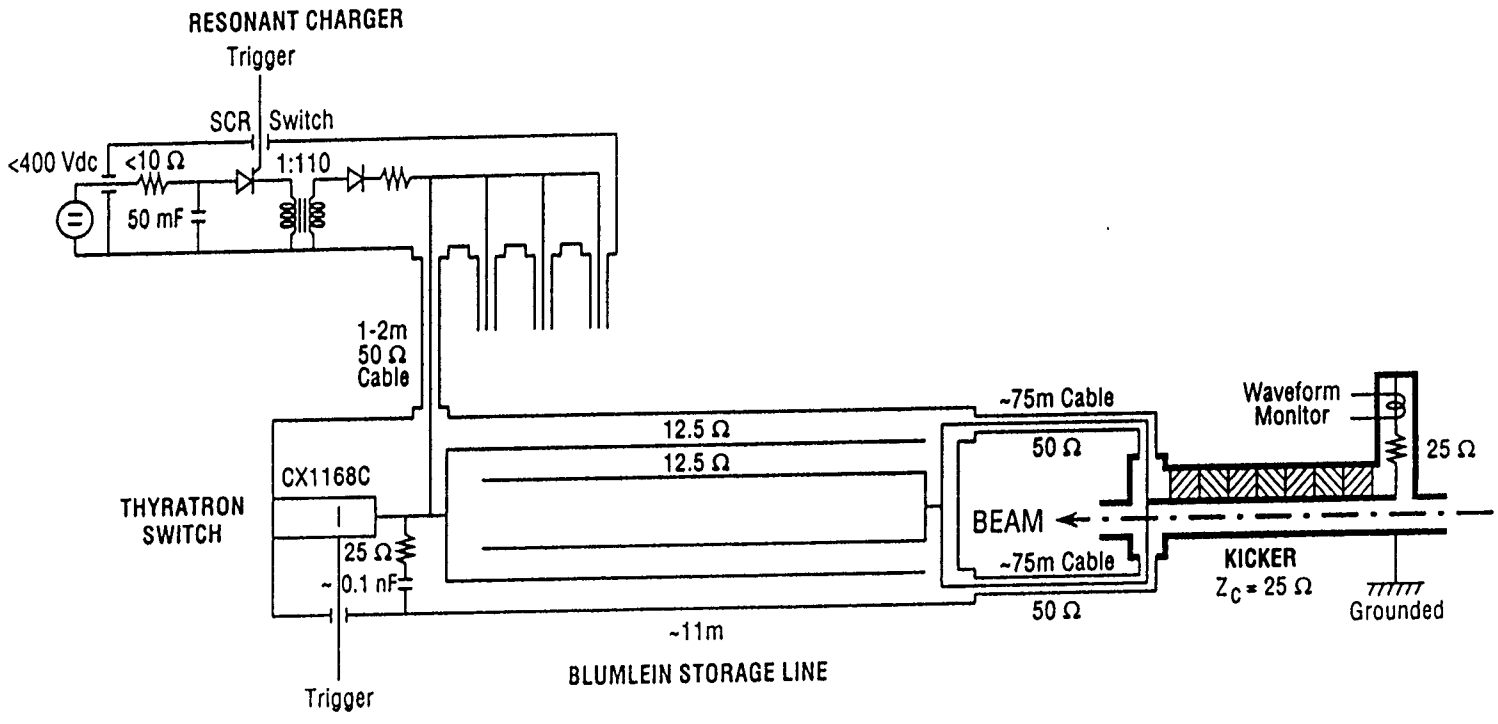
RESONANT CHARGER
Trigger
SCR
Switch
<400 Vdc
<10 Ω
1:110
50 mF
1-2m
50 Ω
Cable
~75m Cable
Waveform
Monitor
12.5 Ω
12.5 Ω
50 Ω
25 Ω
CX1168C
THYRATRON
SWITCH
BEAM
25 Ω
~ 0.1 nF
~75m Cable
KICKER
Z_C = 25 Ω
Grounded
50 Ω
~11m
BLUMLEIN STORAGE LINE
Trigger

System + open
data show
open
H-1.85
31. V. 95

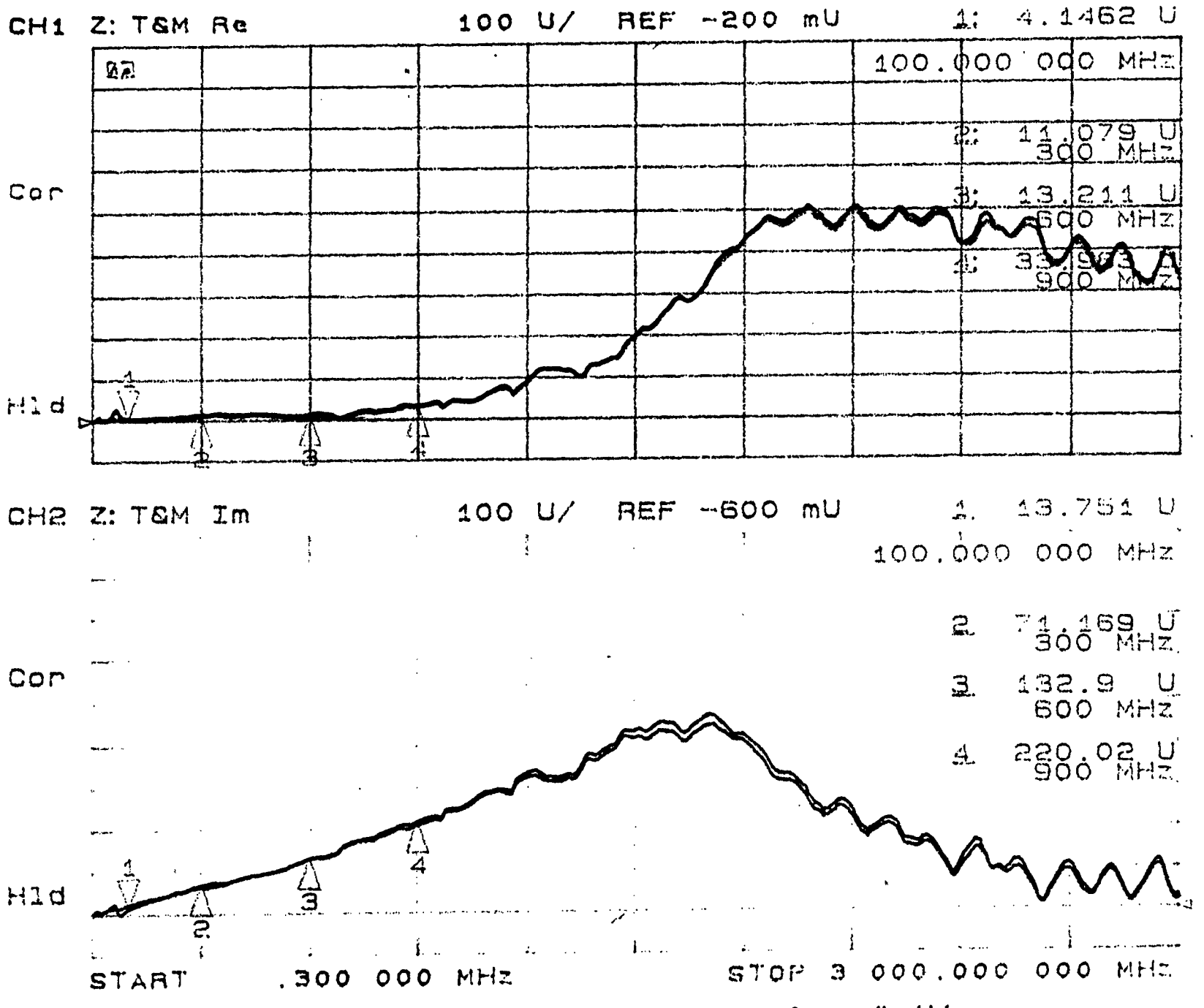

Fig. 6. Impedance comparison of kicker system versus free-standing kicker.

system + both ends terminated
H-185
31.V.91

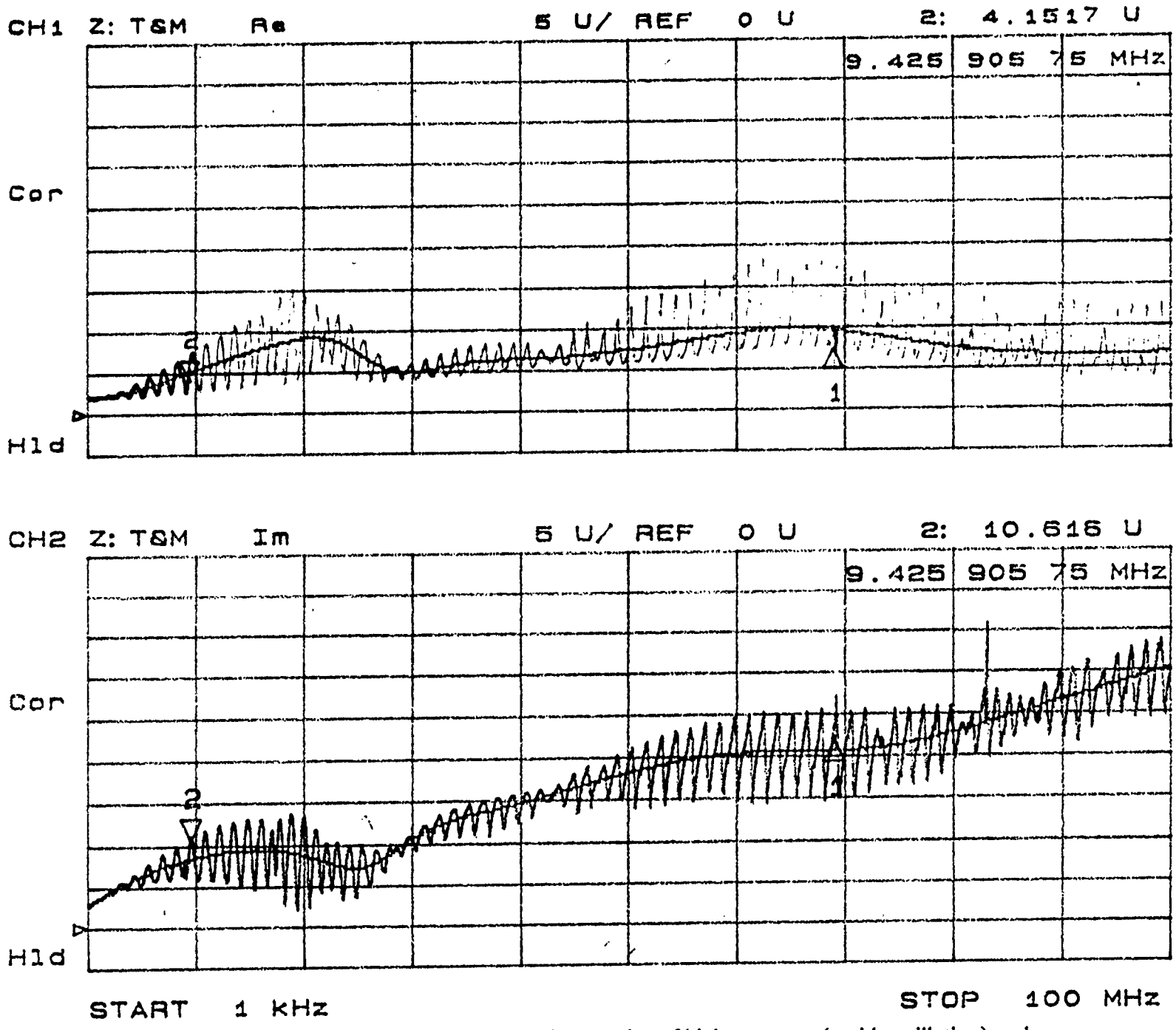

Fig. 7. Coupling impedance and low frequencies of kicker system (rapid oscillation) and free-standing kicker (smooth curve).

Description	Impedances	Wakes
Low-freq. response of a pill-box cavity: [4] length g, radial depth d. When $g \gg 2(d-b)$, replace g by $2(d-b)$. Here, $S = d/b$.	$\frac{Z_0^{\parallel}}{n} = -i\frac{Z_0 g}{2\pi R}\ln S$ $Z_1^{\perp} = -i\frac{Z_0 g}{\pi b^2}\frac{S^2-1}{S^2+1}$	$W_0' = -\frac{Z_0 c g}{2\pi}\ln S\,\delta'(z)$ $W_1 = -\frac{Z_0 c g}{\pi b^2}\frac{S^2-1}{S^2+1}\delta(z)$
	Effect will be one half for a step in the beam pipe from radius b to radius d, or vice versa, with g replaced by $2(d-b)$.	
Iris of half elliptical cross section at low freq. ($\lambda \ll h, a$): length $2a$, max. protruding height h [5].	$Z_0^{\parallel} = -i\frac{\omega Z_0 h^2}{4cb}$, indept. of a $Z_1^{\perp} = -i\frac{Z_0 h^2}{2b^3}$	$W_0' = -\frac{Z_0 c h^2}{4b}\delta'(z)$ $W_1 = -\frac{Z_0 c h^2}{2b^3}\delta(z)$
Pipe transition at low freq.: tapering angle θ, transition height h. γ is Euler's constant and ψ is the psi-function [6].	$Z_0^{\parallel} = \frac{\omega b^2 Z_1^{\perp}}{2c} = -i\frac{\omega Z_0 h^2}{2\pi^2 cb}\left\{\ln\left[\frac{b\theta}{h} - 2\theta\cot\theta\right] + \frac{3}{2} - \gamma - \psi\left(\frac{\theta}{\pi}\right) - \frac{\pi}{2}\cot\theta - \frac{\pi}{2\theta}\right\}$ $W_0' = -\left\lvert\frac{Z_0^{\parallel}}{\omega}\right\rvert c^2\delta'(z)\,,\quad W_1 = -\left\lvert Z_1^{\perp}\right\rvert c\delta(z)\,,\quad h\cot\theta \ll b$	
Pipe transition at low frequencies with transition height $h \ll b$ [6].	$Z_0^{\parallel} = \frac{\omega b^2}{2c}Z_1^{\perp} = -i\frac{\omega Z_0 h^2}{2\pi^2 cb}\left(\ln\frac{2\pi b}{h} + \frac{1}{2}\right)$ $W_0' = -\left\lvert\frac{Z_0^{\parallel}}{\omega}\right\rvert c^2\delta'(z)\,,\quad W_1 = -\left\lvert Z_1^{\perp}\right\rvert c\delta(z)$	
Kicker with window-frame magnet [9]: width a, height b, length L, beam offset x_0 horizontally, and all image current carried by conducting current plates.	$Z_0^{\parallel} = \frac{\omega^2\mu_0^2 L^2 x_0^2}{4a^2 Z_k}$ $Z_1^{\perp} = \frac{c\omega\mu_0^2 L^2}{4a^2 Z_k}$	$W_0' = -\frac{c^3\mu_0^2 L^2 x_0^2}{4a^2 Z_k}\delta_0''(z)$ $W_1 = -\frac{c^3\mu_0^2 L^2}{4a^2 Z_k}\delta'(z)$
	$Z_k = -i\omega\mathcal{L} + Z_g$ with $\mathcal{L} \approx \mu_0 bL/a$ the inductance of the windings and Z_g the impedance of the generator and the cable. If the kicker is of C-type magnet, x_0 in $Z_0^{\parallel}$ should be replaced by $(x_0 + b)$.	
Traveling-wave kicker with characteristic impedance Z_c for the cable, and a window magnet of width a, height b, and length L [9].	$Z_0^{\parallel} = \frac{Z_c}{4}\left[2\sin^2\frac{\theta}{2} - i(\theta - \sin\theta)\right]\,,\quad Z_1^{\perp} = \frac{Z_c L}{4ab}\left[\frac{1-\cos\theta}{\theta} - i\left(1 - \frac{\sin\theta}{\theta}\right)\right]$ $W_0' = \frac{Z_c c}{4}\left[\delta(z) - \delta\left(z - \frac{Lc}{v}\right) - \frac{Lc}{v}\delta'(z)\right]$ $W_1 = \frac{Z_c v}{4ab}\left[H(z) - H\left(z - \frac{Lc}{v}\right) - \frac{Lc}{v}\delta(z)\right]$ $\theta = \omega L/v$ denotes the electrical length of the kicker windings and $v = Z_c ac/(Z_0 b)$ is the matched transmission-line phase velocity of the capacitance-loaded windings.	
Bethe's electric and magnetic moments of a hole of radius a in beam pipe wall [10].	Electric and magnetic dipole moments when wavelength $\gg a$: $\vec{d} = -\frac{2\epsilon_0}{3}a^3\vec{E}\,,\ \vec{m} = -\frac{4}{3\mu_0}a^3\vec{B}$ $\vec{E}$ and $\vec{B}$ are electric and magnetic flux density at hole when hole is absent. This is a diffraction solution for a thin-wall pipe.	

[9] G. Nassibian, F. Sacherer, NIM 59 (1971) 21;
G. Nassibian, CERN/PS 84-25 (BR) (1984);
CERN 85-68 (BR) (1986)

H. Hahn
Workshop on Instabilities, BNL June 1999

The LOW-FREQUENCY COUPLING IMPEDANCE of TRANSMISSION LINE KICKERS

In the low- frequency range here considered, the kicker acts as a transmission line with uniform, albeit anisotropic properties.[1] The kicker and the beam are treated as magnetically coupled transmission lines, for which the differential equations are well known. By limiting the considerations to the extreme relativistic case, where the space charge effect can be neglected, the beam can be represented by a "transmission line" in which the inductance per unit length, L_B/l, is determined by the coupling impedance of the un-terminated kicker, and the capacitance is negligible. One finds, with the harmonic time dependence $\exp(j\omega t)$ suppressed, the following set of differential equations in the position-dependent variables i_K, u_K, u_B representing the kicker current, kicker voltage, and beam voltage respectively

$$\frac{\mathrm{d}u_K}{\mathrm{d}s} = -jk_K Z_K i_K + j\frac{M}{L_K} k_K Z_K i_B$$

$$\frac{\mathrm{d}i_K}{\mathrm{d}s} = -jk_K u_K / Z_K$$

$$\frac{\mathrm{d}u_B}{\mathrm{d}s} = j\frac{M}{L_K} k_K Z_K i_K - j\frac{L_B}{L_K} k_K Z_K i_B$$

Assuming an extreme relativistic, filamentary beam current of unit strength

$$i_B = e^{-jks}$$

one obtains the coupling impedance from

$$Z = -\int_0^l \frac{\mathrm{d}u_B}{\mathrm{d}s} e^{jks} \mathrm{d}s$$

were $k = \omega/c$, $k_K = \omega\sqrt{\langle L\rangle\langle C\rangle}$ and $Z_K = \sqrt{\langle L\rangle/\langle C\rangle}$.

The solution of the above differential equations are found without difficulty, for example by means of the MACSYMA program, together with the boundary conditions established by the kicker input and output terminations, R_i and R_o

$$u_K(s=0) = -R_i\, i_K(s=0)$$
$$u_K(s=l) = R_o\, i_K(s=l)$$

The general expression for the coupling impedance is best handled via the computer program MACSYMA. The case of one port terminated, $R_o = Z_K$, and the input port represented by the general impedance $R_i = R + jX$ is of practical importance, as it reflects the typical situation of the kicker system. Here one finds with the denominator $D = (Z_K + R)^2 + X^2$

$$\begin{aligned} Z = {} & \frac{1}{2} Z_K \left(\frac{M}{L_K}\right)^2 \Big\{ Z_K^2 (1 - \cos 2\theta) + 4 Z_K R (1 - \cos\theta) \\ & + (R^2 + X^2)(3 - 4\cos\theta + \cos 2\theta) - 2 Z_K X (2\sin\theta - \sin 2\theta) \Big\} / D \\ & + j Z_K \frac{L_B}{L_K} \theta \\ & - j \frac{1}{2} Z_K \left(\frac{M}{L_K}\right)^2 \Big\{ Z_K^2 (2\theta - \sin 2\theta) + 4 Z_K R (\theta - \sin\theta) \\ & + (R^2 + X^2)(2\theta - 4\sin\theta + \sin 2\theta) - 2 Z_K X (1 - 2\cos\theta + \cos 2\theta) \Big\} / D \end{aligned}$$

Case of $R_i = Z_K$ and $R_o = Z_K$

$$\begin{aligned} Z = {} & Z_K \left(\frac{M}{L_K}\right)^2 (1 - \cos\theta) \\ & + j Z_K \frac{L_B}{L_K} \left\{ (1 - \kappa^2)\theta + \kappa^2 \sin\theta \right\} \end{aligned}$$

$$\kappa^2 = \frac{M^2}{L_K L_B}$$

The results can be fitted with L_B = 132 nH and $(1 - \kappa^2) = 0.325$, leading to

$$L_B/L_K = 0.18,\ M/L_K = 0.34, \text{ and } \kappa = 0.82.$$

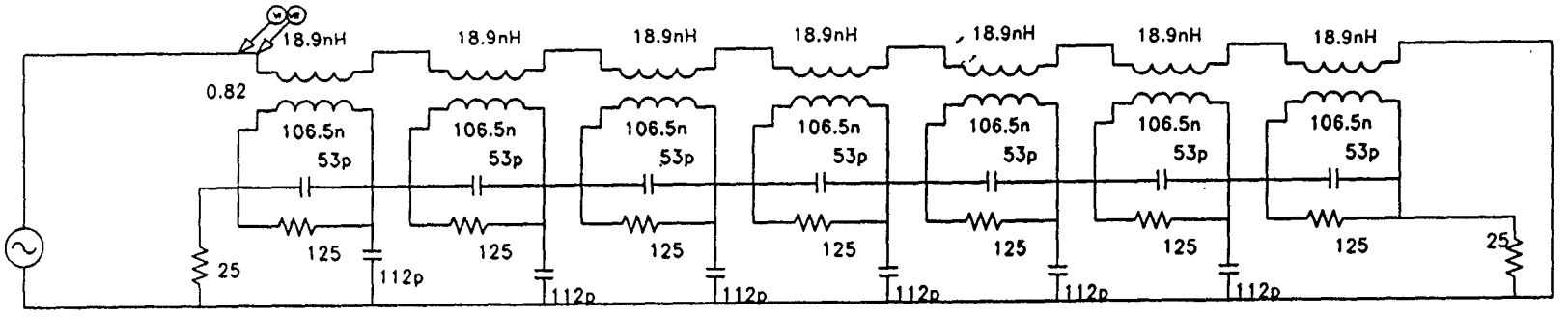
18.9nH
18.9nH
18.9nH
18.9nH
18.9nH
18.9nH
18.9nH
0.82
106.5n
53p
125
25
112p
25

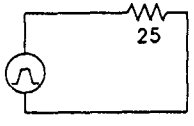
25

Fig 3

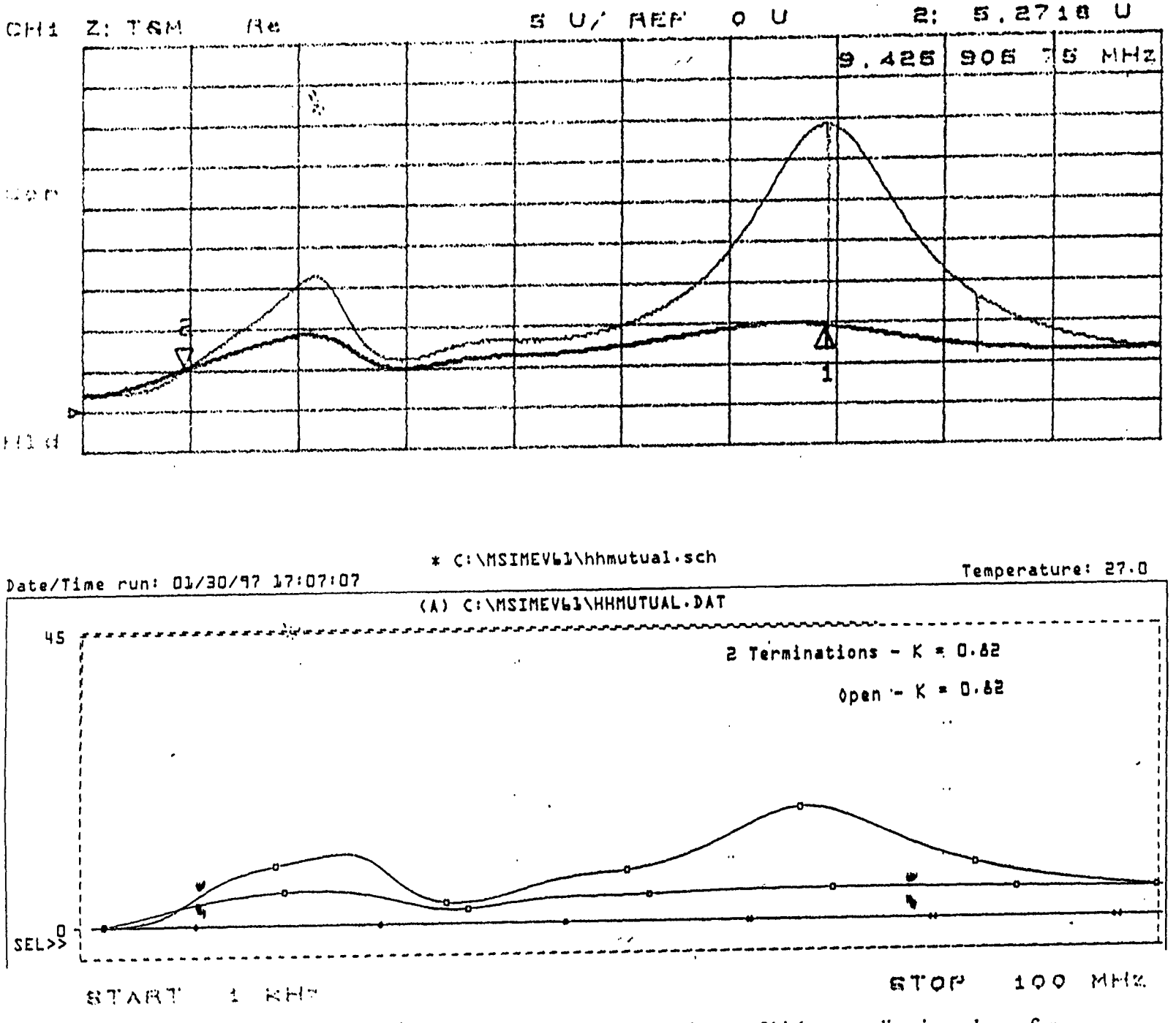

Fig. 6. Comparison of measured and Spice-calculated real part of kicker coupling impedance for one port terminated and the other port open or terminated.

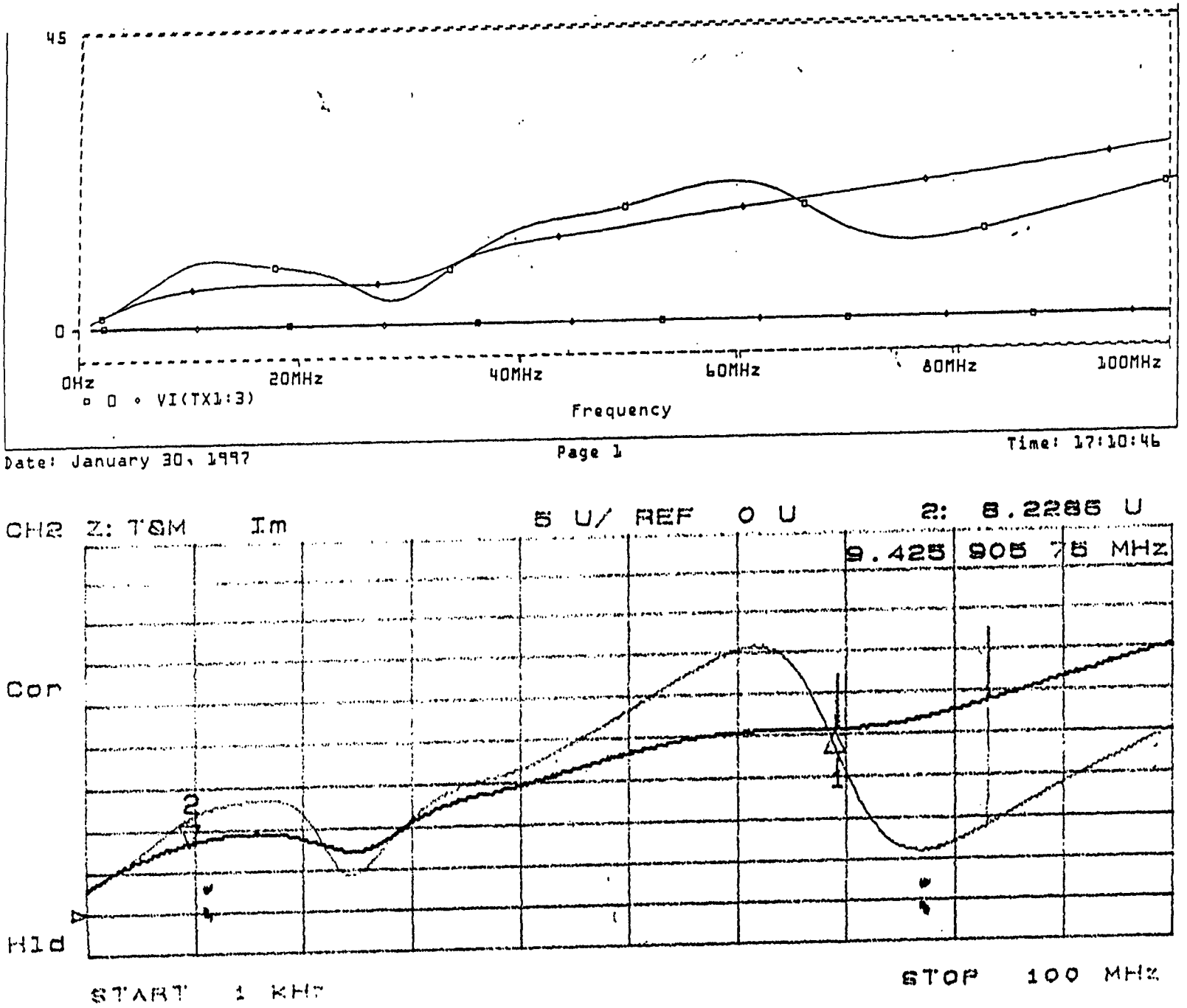

Fig. 7. Comparison of measured and Spice-calculated imaginary part of kicker coupling impedance for one port terminated and the other port open or terminated.