Accelerator Department
BROOKHAVEN NATIONAL LABORATORY
Associated Universities, Inc.
Upton, New York

AGS DIVISION TECHNICAL NOTE

No. 92

J.G. Cottingham
March 28, 1972

COMPUTER INTERFACE WITH THE CONVERTED PICK-UP ELECTRODE SYSTEM

The converted pick-up electrode system was to consist of two subsystems. The first subsystem was to give radial and vertical position of the beam in a large number of azimuthal points. Each unit of this subsystem was to be economical to deploy because of the large numbers (288 units) required. This forced limitations in bandwidth and limitations in the quality of coaxial cable employed.

The second subsystem was to be of the highest quality particularly in high frequency response and was to be deployed at only a few azimuthal locations. To date no engineering was ever made available to work on the second subsystem. The first subsystem was mechanically installed during the summer of 1971 and the associated electronic signal processing equipment is currently being developed. By the late summer of 1972 this system should exist.

With proper statistical processing of the increased quantity of position information, good well-defined equilibrium orbits should be obtained. To facilitate this processing the analogue information from the pick-up electrode system must be interfaced with the control room computer complex. Originally it was hoped to expand the present computer interface system now employed on the old pick-up electrode system. This system employes mechanical relays which have started to deteriorate. Expansion of this type of relay system will create a maintenance problem of sizable proportions. Newly available solid state devices make it possible to economically design an all solid state interface system to process the 288 analogue signals into the computer. A simplified block diagram is shown in Fig. 1. Cost and time estimates are shown in Table I and II. This system requires only one AGS pulse to obtain information for a complete orbit.

To aid in understanding the injection process there is a desire to also be able to process some of this information to generate beam trajectories near injection. This requires different computer interface. To obtain trajectories individual beam bunches must be precisely sampled and digitized whereas before a rectified and filter analogue signal was all that was required to convey mean beam position.

Figure 2 is a simplified block diagram to accomplish this objective. One pulse per turn is required to gather trajectory information. The system consists of 168 sampling units which are divided into two groups, one group of 24 units and one of 144 units. The smaller group samples the same first turn information on each AGS pulse. This information is used in the computer to decide whether this pulse matches previous AGS pulses so as to decide to accept or reject information from the large sampling group.

The large sampling group can be indexed under a computer control from revolution to revolution as determined by the software. The sampling system consists of two each sample and hold units with appropriate buffer amplifiers. This is made necessary because the high speed (50 nsec) sampling units cannot hold its sample information long enough for all 144 units to be digitized. The first sample is taken at a fixed time after the leading edge of the beam pulse on the desired revolution. The second sample (10 microsecond unit) is taken some 50 microseconds later, details not shown. After all information is stored in analogue form it is sequentially digitized using solid state analogue switches and analogue to digitial converter. Each computer word contains three units of sampled information and the analogue switch status which identifies the channel.

In order to eliminate the necessity of sampling the baseline prior to sampling the beam pulse, use is made of the finite low frequency response of the new pick-up electrode system. This system has a low frequency coupling time constant of 3 microseconds which is determined by the transformed characteristic impedence of the coaxial line and the pick-up electrode capacity. If the beam pulse is 0.3 microseconds wide, the baseline shift is 2.8% just prior to the second beam passage, 3.3% prior to the third and 3.4% prior to all other passages. This is small, and if desired, can be computer corrected. A factor of 2 in interface hardware is saved by this approach.

The rising edge of the beam pulse must be fast compared to the width requirement (i.e., $\sim$ 0.1 mircrosecond). This sharp leading edge will require a

front end beam clipper on the injected beam similar to the system being planned by the Linac group. Present $\Delta p/p$ will limit observation to 10 revolutions after which the leading edge will become dispersed. With a 200 MeV leading edge clipper and with narrow pulses, the $\Delta p/p$ can be expected to improve thus making possible 30 revolutions obtainable.

The interface hardware to allow the computer to determine equilibrium orbits is clearly first priority. The second system to follow injection trajectories is a much more massive task and I question the advisability of deploying this system.

TABLE I

Cost Estimates

Orbit System	Unit Price	Total Price
Detector and 10 μsec S-H	$ 35	$ 10,000
Analogue Switching		500
A-D Converter (9 Bits)	120	360
Miscellaneous Timing and Hardware		3,500
		$ 14,360

Trajectory System	Unit Price	Total Price
50 Nanosec S-H	$ 90	$ 15,120
10 μsec S-H	35	5,880
Disc + Gate + Delay	35	5,880
Switching		500
Relays	5	360
Miscellaneous Timing and Hardware		5,000
		$ 32,740

TABLE II

Time Schedule

Orbit System	Weeks
Prototype Design and Assembly	6
Prototype Testing and Development	4
Bid Process	3
Quantity Procurement	8
System Assembly	4
System Testing	4
	29 Weeks

Trajectory System	Weeks
Prototype Design and Assembly	8
Prototype Testing and Development	10
Bid Process	4
Quantity Procurement	15
System Assembly	8
System Testing	12
	57 Weeks

Distr: Department Administration
AGS Division Physicists
AGS Division EE's
AGS Division ME's
Operations Engineers
M.Q. Barton

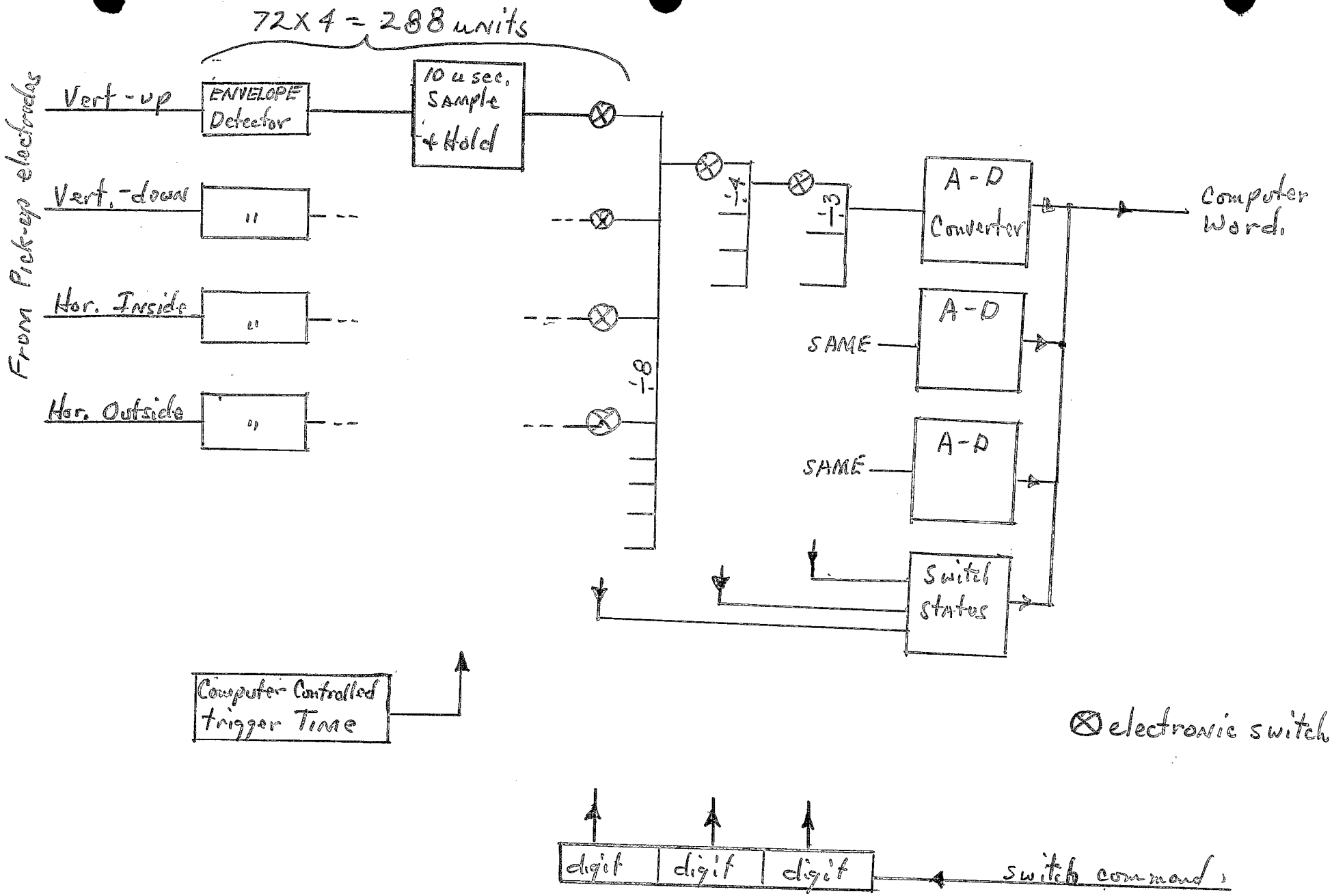
72 X 4 = 288 units
From Pick-up electrodes
Vert-up
Vert.-down
Hor. Inside
Hor. Outside
ENVELOPE Detector
"
"
"
10 u sec. Sample + Hold
-8-
-4-
-3-
A-D Converter
SAME
A-D
SAME
A-D
Switch Status
Computer Word.
Computer Controlled trigger Time
⊗ electronic switch
digit
digit
digit
switch command.

Fig. 1

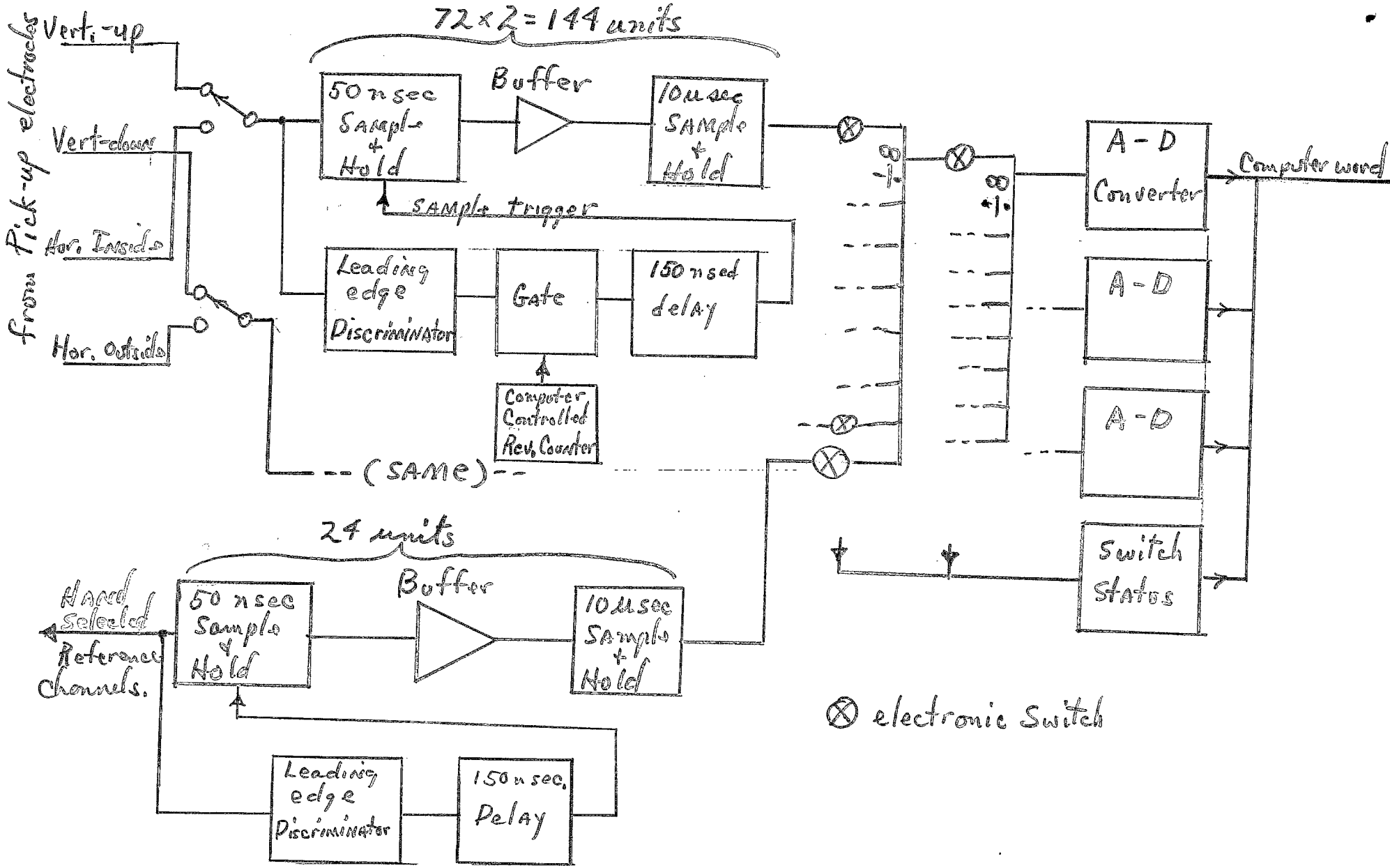
from Pick-up electrodes
Vert.-up
Vert-down
Hor. Inside
Hor. Outside
72 × 2 = 144 units
50 nsec Sample + Hold
Buffer
10 μsec Sample + Hold
Sample trigger
Leading edge Discriminator
Gate
150 nsec delay
Computer Controlled Rev. Counter
(SAME)
∞ -1.
∞ +1.
A-D Converter
A-D
A-D
Computer word
Switch Status
24 units
Hard selected Reference Channels.
50 nsec Sample + Hold
Buffer
10 μsec Sample + Hold
Leading edge Discriminator
150 nsec. Delay
⊗ electronic Switch

Fig. 2.