Accelerator Department
BROOKHAVEN NATIONAL LABORATORY
Associated Universities, Inc.
Upton, New York 11973

AGS DIVISION TECHNICAL NOTE

No. 156

NORMALIZED SUM/DIFFERENCE MONITOR FOR PICK-UP ELECTRODE AMPLIFIERS

R. Preston*, L. Ahrens and E. Gill
November 8, 1979

Introduction

The electronic module described herein is a diagnostic tool to aid in understanding the present position-measuring pick-up electrode (PUE) system at the AGS. Specifically, the module works in conjunction with the "Ring Pick-up Electrode Amplifier and Compensation" module (D09-E432). The latter module contains two channels of electronics which provide one horizontal and one vertical position measurement. There are 72 such modules in the AGS PUE system. The new circuit interacts with one of the above channels.

Proton bunches circulating in the AGS induce voltages on electrostatic PUE's. These signals are sent via long coaxial cable to the PUE amplifier modules for frequency compensation and amplification. Following amplification, this wide-band signal, referred to in what follows as the system "rf out", feeds directly into a DC-restorer and an unnormalized low frequncy difference amplifier. The rf out is also available on BNC connectors for other uses. It is this output which forms the input to the unit to be described in this report, the normalized sum/difference module (see Fig. 1).

The voltages induced on the PUE's are to first order linearly related to the distance that the bunch is away from the plate. The beam horizontal position, for example, at a given PUE is obtained by dividing the output of the difference amplifier ($= V_2 - V_1$ of Fig. 2) by a normalizing sum signal ($= V_2 + V_1$). In the present system the sum signal originates not from this

*Student Research Assistant, Summer 1979, affiliated with Yale University.

particular PUE and its electronics, but from a current transformer. The same signal is used to normalize all of the PUE's in the system. The primary motivation for the new module is to allow normalizing the PUE output locally in order to observe any distortions caused by the single overall normalization of the beam position in the ring. The new module allows comparison to be made between the present system output and an identical output using electronics in the new module, as well as comparison with the locally normalized output. The former comparison is a check.

One motivation for expecting trouble from the present system is the following: The frequency bandwidth of the present system is approximately 10-15 MHz determined primarily by the transformer network in Fig. 1. On the other hand, the bunches in the beam, as they accelerate to transition, gain significant frequency components well above this range. The voltages, V_1 and V_2, seen by the final electronics for a beam fixed in transverse position but accelerating to transition, would decrease as the bunching increases. The difference signal would decrease. If the normalizing is done by an independent system with a wider frequency response, $(V_2 + V_1)$ would not decrease and the beam would appear to move.

Circuit Description, Construction, Calibration

The new module (Fig. 3) has two BNC (front panel) inputs terminated in 91 ohms for RG/U 62 coaxial cable. Each input is fed into a wideband, 120 MHz, differential-input LM733 video amplifier, with one input grounded and a resultant fixed gain of 5. Thus, any pulse input is reduced by a factor of 4/10 by the adjustable 91 ohm voltage divider termination and amplified by a factor of 5 by the 733 differential amplifier for an overall gain of 2(= 5 x 4/10). The gain of 2 in the normalized SUM/DIFF module makes the rf signal presented to the new DC restore circuit identical to the internal rf signal presented to the DC restore circuit in the PUE system circuit.

The LM733 is a high current drive (10 mA) amplifier with a large bandwidth (120 MHz) that is adequate for the significant Fourier components of the beam buncher. The 733's gain-select pins (3, 4, 11, 12) are left unconnected. No external frequency compensation is necessary. The minimum input voltage is ± 1.0 volts and the output DC offset voltage can be as high as 1.5 volts. However, the two 733's are AC coupled to eliminate this high DC offset. A ± 8V dual power supply is required for the 733.

The input amplifiers feed into DC restorer circuits and low pass filters. The DC restorer is identical to that in the system circuit. The IN995 DC restorer diodes are biased by a IN746A zener diode arrangement at 3.3 volts. This leaves the output of the low pass filters at 3.1 volts DC with zero input. Both signals are fed into LF356 sum and difference op-amps; thus, there is a 6.2V (i.e., 3.1V + 3.1V + 3.1V) DC offset at each of these. At the difference op-amp (#3, see schematic) this offset cancels out; however, at the summing op-amp (#4) this 6.2V offset must be subtracted electronically using a third IN995 diode and 33K resistor arrangement. Trouble may arise over the absence of a third 4.7 mHy inductance in this 6.2V null arrangement: Ideally there is no potential drop across the inductor for DC; in reality, a few millivolts are lost at higher input frequencies. All three IN995 diodes are physically adjacent to each other for consistent performance as the temperature varies.

The sum and difference signals are normalized by a high accuracy, low-drift 428K divider. The limit on the range of input signals X and Z are as follows:

$$\left|\frac{Z}{X}\right| \leq 1.0,\ Z \leq 10V,\ -10V \leq X < 0V$$

The trim procedure for the 428K can be found in external references, along with bandwidth, nonlinearity and other specifications. Its transfer function is $\frac{10Z}{X}$.

A 582 sample/hold is used as an optional output feature. It is triggered by a 74121 one-shot which in turn is triggered by an AGS pulse. The AGS pulse goes through a 92 ohm voltage-divider termination to supply a 5 volt pulse to the 74121. The sample/hold is normally in the "hold" position until triggered by the 74121. Specifications on holding time, leak-through and linearity of the 582 can also be found in external references.

External connections to the module are as follows. Two BNC inputs, labeled "A" and "B", are for the "rf" signal from the system amplifier. BNC connectors bring out 20(A - B), the unnormalized difference signal, amplified to be identical to the DC output of the normal system; - (A + B), the sum signal; and 20(A - B)/(A + B), the normalized difference signal. The sample and hold output is also available on a BNC and a lemo connector accepts the AGS trigger pulse for the sample and hold. Variable resistors, accessible from the outside, allow balancing the gains of the two channels. DC offsets and other gains must be adjusted internally.

Acknowledgement

We appreciate the advice of Siegfried Naase while building the module described above.

/mn

Distribution: Dept. Admin.

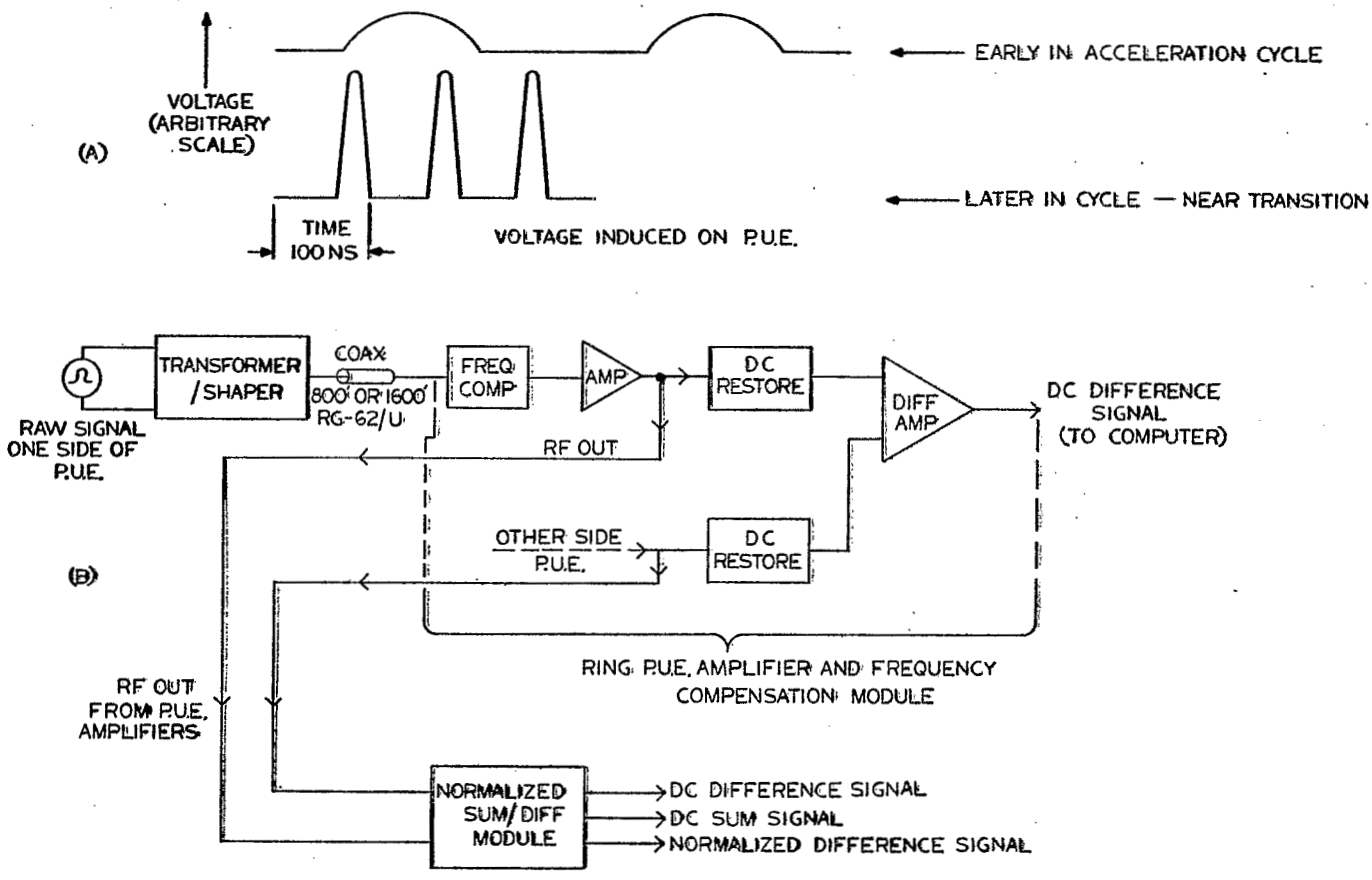

FIG. 1 (A) INPUT SIGNALS TO THE SYSTEM
(B) SCHEMATIC OF P.U.E. SYSTEM

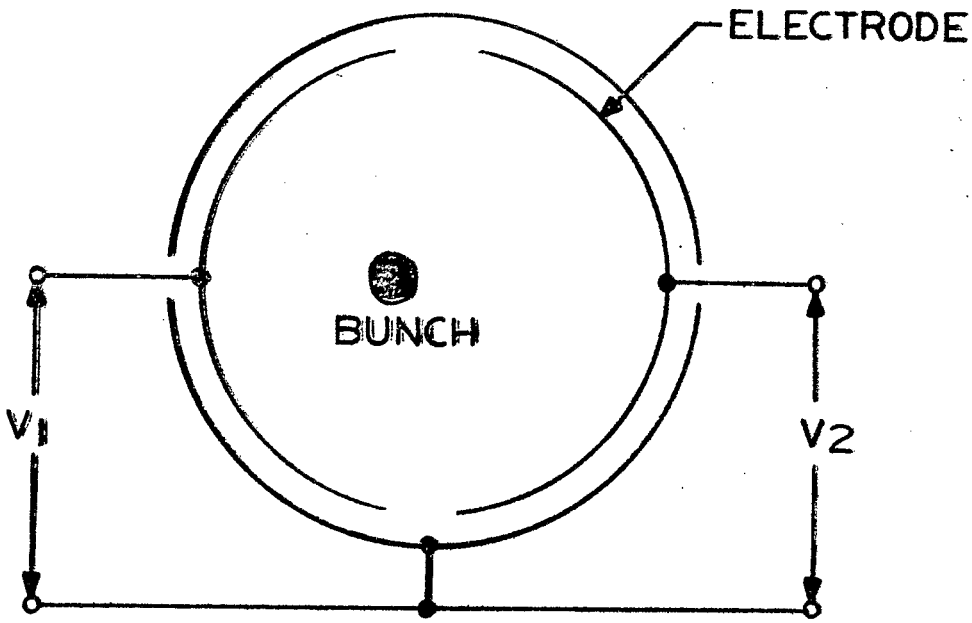

FIG. 2 BEAM VIEW OF HORIZONTAL P.U.E

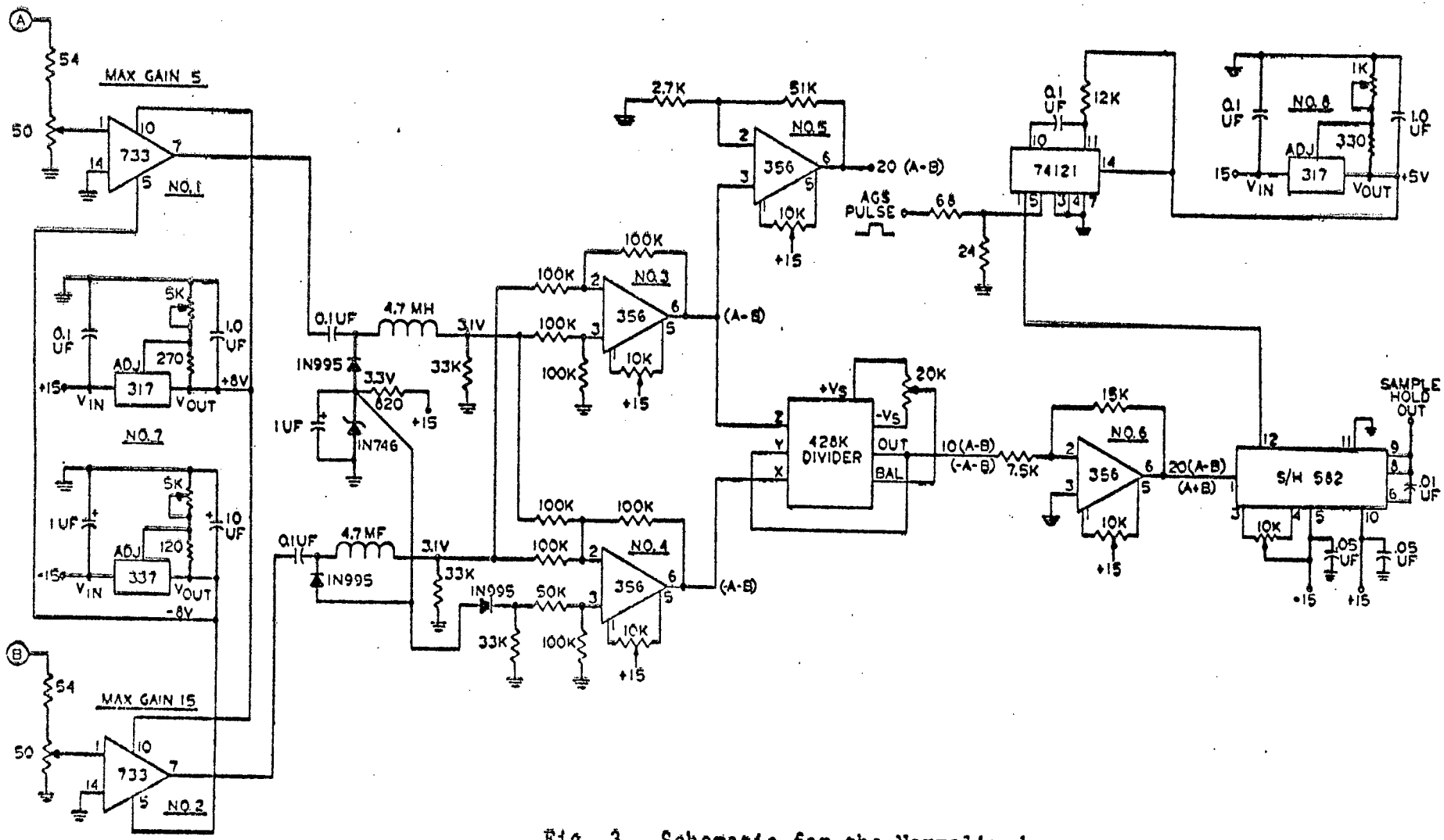

Fig. 3 Schematic for the Normalized Sum/Difference Monitor