Accelerator Department
BROOKHAVEN NATIONAL LABORATORY
Associated Universities, Inc.
Upton, New York

AGS DIVISION TECHNICAL NOTE

No. 121

A BEAM LOADING ANALYSIS FOR THE AGS

E.C. Raka
June 30, 1976

Introduction

Beam loading effects (interaction of the bunched beam current with accelerating cavity impedances) have been present in the Brookhaven AGS for several years. They are most noticeable at injection for intensities $\gtrsim 4 \times 10^{12}$ but have also been observed on rare occasions at $\gamma \approx 1.5$ for intensities of $\approx 7 \times 10^{12}$. It has been possible to alleviate these effects during the capture process when the required rf voltage is 3-4 kV/gap by a scheme to be described later. As the operational intensity of the AGS approaches 10^{13} protons/pulse, the required adjustments become more critical and the principal loading effect, reduced capture efficiency, increases. Although some studies have been made it is still not clear why the present scheme helps. It is therefore necessary, if higher intensities are to be achieved, that more detailed investigations be undertaken.

With this in mind the analysis developed by Bigliani[1] and Pedersen[2] has been applied to the AGS rf control system. This includes a dynamic linearized model of the beam loading interaction with the feedback loops for rf amplitude, phase and cavity tuning. The effects of beam current modulation have been added, as well as the contribution from the radial control loop, for completeness. In order to obtain a preliminary understanding of the problem the conditions for stability of the coupled loops is examined under certain limiting assumptions. The presently applied "compensation scheme" is then discussed along with past observations. Finally some proposals are made for future studies.

The AGS Rf Control System

Figure 1 shows a simplified block diagram of the beam[3] control system with the tuning and AGC loops included. The dynamic response of the system without these two loops and for zero beam loading has been described previously.[4-6] A further loop for damping[7] bunch shape oscillations is also present, but since it is not activated until well after injection, it has been omitted. In what follows we will treat the transfer function for the phase and radial loops as separate functions even though the radial correction signal enters into the phase loop before the final self-tracking amplifier. The latter contains three such amplifiers plus several phase shifters and delay cable.[3] Its overall transfer function for phase modulation is denoted by F_b. The radial loop transfer function will be called F_r.

The Idealized Model

We assume that the cavities are driven by the beam and generator currents in the following manner[1,2] where I_B is the component of beam current at the bunch frequency and the phase relationships are as shown with $\bar{V}$ the total cavity voltage as the reference. As pointed out in Ref. 2 the generator driving impedance has been included in R the cavity shunt resistance. φ_b is the stable phase angle defined from $(\varphi_V - \pi/2)$ and is also the beam current phase angle since one assumes a steady state (no transients present) for the stability analysis. φ_Z is the phase angle of the cavity plus driving impedance and φ_L is called the loading phase angle[2] which is the total impedance phase angle for zero beam current. I_o is the required generator current to give the same gap voltage at resonance with no load. The amount of beam loading is then characterized by the parameter $Y = I_B/I_o$. Since a steady state is assumed one has[2]

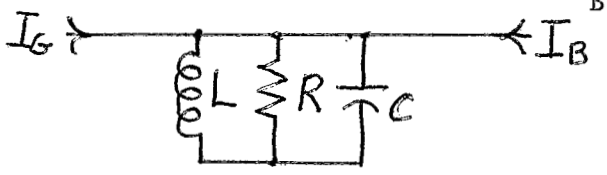

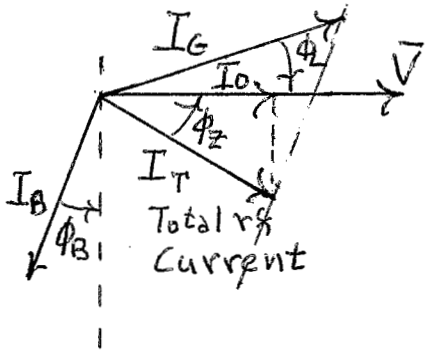

$$\tan \varphi_L = \frac{\tan \varphi_Z - Y \cos \varphi_B}{1 + Y \sin \varphi_B} \qquad I_G = \frac{I_o(1 + Y \sin \varphi_B)}{\cos \varphi_L} \quad . \tag{1}$$

The stability analysis requires knowledge of the transmission for small amplitude and phase modulation of I_G, I_B, and variations of cavity tune, to the gap voltage $\bar{V}$ and thence back through the beam to I_B and through the control loops to I_G and the cavity tune. This is shown in Fig. 2 which is a signal flow diagram for such modulations. We have used the notation of Ref. 2 where the transfer functions for phase and amplitude modulation through the cavity (the G's) are derived. One can also derive them from Eqs. (5-9) Ref. 1. For the beam transfer function $B(s) = p_B(s)/P_V^*(s) = \omega_\varphi^2/(s^2+\omega_\varphi^2)$ is used for the dipole oscillations and $\frac{\bar{X}}{a_V} = -\omega_\varphi^2/(s^2+4\omega_\varphi^2)$ for the quadrupole or bunch shape oscillations. The latter will result in modulations of I_B and we take $i_B = -K\bar{X}$ with $\bar{X} = (\overline{\delta q^2} - \overline{\delta p^2})/A$ and $A = \overline{\delta q^2} + \overline{\delta p^2} \cong$ constant. $\overline{\delta q^2}$ and $\overline{\delta p^2}$ are the average over the bunch of the second moment of the individual particles about the center of charge.[8] K is a constant also depending upon the distribution in the phase space where the steady state trajectories are circles. Since this is to be a linear approximation we have ignored the coupling that is present between dipole and quadrupole oscillation when second order effects are included.[8] Hence only amplitude modulations of $\bar{V}$ affect i_B.[7] In the diagram the p's are phase deviations and the a's relative amplitude variations. One studies the stability of the system by examining the roots of its characteristic equation.[9] For the AGS this is given by Eq. A on Fig. 1 which however does not include the loops due to I_B modulation. It can be obtained by putting $C_p = +\omega_\varphi^2(F_r-F_b)/s^2$ in Pedersens equation (B1).[2]

Stability Analysis: Tuning + AGC Loops

The first limiting case we consider is with the tuning loop and AGC loops alone. Furthermore since we are interested in the conditions present at injection where f_φ the phase oscillation frequency is 4-5 kc, the response of the loops from f_φ to $\approx 3f_\varphi$ will be used for C_T and C_a. Now the best available data on the tuning loop response for f_{rf} = 2.5 MHz indicates the unity gain is at $\approx$ 1 kc while for the AGC loop the unity gain frequency is $\approx$ 15 kc. Thus the transmission through the former can be neglected and we are left with only the AGC loop. Next we assume that $\varphi_L = 0$ a condition that normally is true when the ten accelerating stations are adjusted under no load conditions. We then obtain for the characteristic equation

$$1 + C_a G^G_{aa} - B\,[G^B_{pp} + C_a(G^G_{aa}G^B_{pp} - G^G_{ap}G^B_{pa}) + \tan\varphi_b G^B_{pa}] = 0 \quad . \qquad (2)$$

Following Ref. 2 we can write this as $(1-BH(s)) = 0$ where

$$H(s) = \frac{G^B_{pp} + C_a(G^G_{aa}G^B_{pp} - G^G_{ap}G^B_{pa}) + \tan\varphi_b G^B_{pa}}{1 + C_a G^G_{aa}} \tag{3}$$

and assume that the system will oscillate in the neighborhood of ω_φ at a frequency $s = j\omega_\varphi + \Delta s$ where $\Delta s \cong - j\omega_\varphi H(j\omega_\varphi)/2$. A positive real part for Δs should result in instability. After considerable manipulation, we find that for stability under the above conditions

$$\frac{\omega_c}{\omega_s} Y \sin\varphi_b(1+Y\sin\varphi_b)\left[(1+Y^2\cos^2\varphi_b) - \frac{\omega_s^2}{\sigma^2} + (1+Y\sin\varphi_b)\frac{\omega_c}{\sigma}\right] -$$

$$- Y^2\left[2\frac{\omega_s}{\sigma} - \frac{\omega_c}{\sigma}(1+Y\sin\varphi_b)\right] < 0 \tag{4}$$

where $C_p = \omega_c/s$ $\sigma \cong \omega_r/2Q_{cavity}$ and $\omega_s = \omega_\varphi$.

Now let us assume $\bar{V} = 3$ kV/gap, $\dot{B} = 4.7$ kG/sec, $\varphi_b = 15.7^o$, $N = 1.14 \times 10^{13}$ protons and that $I_B = 1.3\ I_{DC} = .5$ amp. At 3 kV the best available data for 2.5 MHz shows $R \cong 18$ kΩ/gap. Assuming the effective capacity to be 325 pf we obtain a $\sigma = 11.4 \times 2\pi \times 10^3$ with $I_o = 1/6$ amp. Thus $Y = 3$ and we have $\omega_c = 2\pi \times 14 \times 10^3$ with $\omega_s = 2\pi \times 5 \times 10^3$ say. Then the left hand side of (4) equals 77.5 or instability. In fact instability is indicated for very small values of Y. The growth rate associated with the $Y = 3$ case is $\lambda = .276\ \omega_\varphi = .867 \times 10^4\ \text{sec}^{-1}$ and $|\Delta s| \cong .5\ \omega_\varphi$ which is rather large even when compared to $2\omega_\varphi$. Hence the growth rate and frequency shift of $\approx .41\ \omega_\varphi$ are only approximate. Even for $Y = 1$, $\lambda = .16\ \omega_\varphi$ and $\text{Im}(\Delta s) = -.16\ \omega_\varphi$.

The case for $\varphi_L \neq 0$ results in a very unwieldy expression for stability. This has been evaluated for $Y = 3$ and $\varphi_L = -\varphi_b$ with $\tan\varphi_Z = \epsilon Y \cos\varphi_b = 2.38$ where $(1-\epsilon) = (\tan\varphi_b/Y\cos\varphi_b) + \tan^2\varphi_b$. One obtains a $\lambda = .062\ \omega_\varphi$ and clearly a slightly larger negative value of φ_L would result in stability.

<u>AGC, Tuning and Beam Control Loops</u>

We consider first the limiting case of an ideal phase loop ($F_b = 1$) and the radial loop disabled. After considerable manipulation the characteristic

equation becomes (since the tuning loop is not considered as above)

$$S^5+2\sigma S^4+S^3[\omega_s{}^2+\sigma^2(1+\tan^2\varphi_Z)+\omega_c\sigma(1+Y\sin\varphi_b)]+S^2[2\sigma\omega_s{}^2 + \omega_c\sigma^2(1+\tan^2\varphi_Z+Y\sin\varphi_s-Y\tan\varphi_Z\cos\varphi_b)-\sigma\omega_s{}^2(1+Y\sin\varphi_s)] + S\sigma\omega_s{}^2[(1+Y\sin\varphi_b)\omega_c-\sigma Y\sin\varphi_b(\tan\varphi_Z\tan\varphi_b+1)]+\sigma\omega_s{}^4\tan\varphi_b (\tan\varphi_Z-Y\cos\varphi_b) = 0 \quad . \tag{5}$$

Rather than try to find the roots of this equation we shall apply the general criteria for stability. Thus all the coefficients of the powers of s must be present and be of the same sign as a necessary condition. Furthermore, Routh's[9] criterion for the coefficients must also be satisfied. The first of these lead to the following relations $\varphi_b>0$, $\tan\varphi_Z>Y\cos\varphi_b$ hence $\varphi_L>0$, and $\omega_c>\sigma Y\sin\varphi_b\,(1+\alpha Y\sin\varphi_b)/(1+Y\sin\varphi_b)$ where $\tan\varphi_Z=\alpha Y\cos\varphi_b$ or $\alpha>1$. If we put $\omega_c=\beta Y\sin\varphi_b$ then one finds by Routh's method that

$$\frac{Y\beta\sin\varphi_b}{\beta/2\,Y\sin\varphi_b-1}>\alpha<\frac{\beta Y\sin\varphi_b+\beta-1}{Y\sin\varphi_b} \quad . \tag{6}$$

For reasonable values of α, β less than two say, one can obtain stability. The main point of this example is to show that φ_L should be positive rather than negative, that φ_b must correspond to acceleration and that one obtains a requirement on ω_c related to σ and the loading parameter Y. As an example we take again $Y = 3$ $\varphi_b = 15.67^\circ$ and ω_c and σ as above. Then we assume $\varphi_L = \varphi_b$ which gives $\alpha = 1.176$ which easily satisfies (6) since $\beta = 1.516$ and hence $\tan\varphi_Z = 3.4$ or $\varphi_Z = 74^\circ$. We note that even for $\varphi_L = 0$ one would have $\tan\varphi_Z = 2.88$ or $\varphi_Z = 70.85^\circ$.

Now it is possible to operate with the radial loop open for ≈ 3 msec at injection hence the behavior under the above conditions could be studied. With better measurements on σ and ω_c plus knowledge of F_b the actual roots could be calculated and potential stability determined. At present F_b is not known with any accuracy so this analysis must wait. We could in principal operate with only the radial loop closed, but the system is unstable even for $Y = 0$ with the single time constant filters now used. Of course, with both

loops open we have the conditions of the first example which can therefore also be studied at injection if desired. Since F_b cannot readily be changed one will have to play with F_r, ω_c and φ_L for the expected values of Y in order to insure stability.

The Present Situation Regarding Loop Stability

At injection the rf voltage starts out at a few hundred volts per gap and is rapidly (in .2 msec or less) increased to 3-4 kV/gap. If all ten stations are on this provides 120-160 kV for capture and initial acceleration. The beam bunches in less than .5 msec and then exhibits a small amount of modulation of $2f_\varphi$. These are the conditions for high intensity operation. Below $4\text{-}5 \times 10^{12}$ it is desirable to slow down the rate of rise of the rf amplitude and decrease its value somewhat. For high intensity operation it has been found that if up to four stations do not follow this initial use from level 1 to level 2 the maximum accelerated intensity is achieved. This is accomplished by adjusting the dc offset that is added to the output of the individual phase detectors in the vernier tuning loops so that the station frequency is far enough above the starting oscillator frequency that the loop has little or no control. Then as the frequency increases the off-tune stations come on-line up to 5 msec, after injection. One must be careful that this offset does not interfere with the loop operation later in the acceleration cycle. Since the rf drive is still not to great during this time (corresponding to less than 6 kV/gap) no harm is done to the station by this scheme.

The simplest explanation as to why this scheme helps the overall capture is that one has to drive the remaining stations harder to obtain the same total voltage. One gains very rapidly in reducing the loading parameter Y since in addition to increasing I_o because $\bar{V}$ is increased, the station impedance decreases with increased $\bar{V}$ which further increases the required driving current. Exactly what happens to reduce the capture efficiency is not clearly understood. Under optimum conditions the detected gap voltage signal is relatively smooth after level 2 is reached with perhaps a small amount of $2f_\varphi$ modulation appearing. If however all ten stations are active at injection and the intensity is $> 5 \times 10^{12}$ one develops considerable modulation on the rf envelope signal which can contain other frequencies besides $2f_\varphi$. Generally these are higher than $2f_\varphi$ which means that one has to include I_B modulations in any analysis.

A clear example of an instability at $2\omega_\varphi$ was present in late 1974 when the injection $\dot{B}$ was reduced to 2.5 kG/sec so that level 2 was less than 100 kV. At $> 6 \times 10^{12}$ one observed envelope modulations at $2f_\varphi$ starting about 25 msec after injection; at lower intensities or higher voltage they would disappear. Since we no longer operate at such low values of $\dot{B}$ and rf amplitude this particular instability has not returned, but it indicates again that we are probably dealing with a relatively high frequency effect.

Other Loading Considerations

In the above we have assumed that a steady state exists and that the losses caused by the beam loading are due to potentially unstable oscillations about that point. However the initial capture process is of course transient in nature wherein I_B is increasing from zero and I_o and $\bar{V}$ are rapidly changing but φ_Z is slowly changing. Thus some of the losses due to loading effects can occur before a quasi steady state is reached.

Following the analysis in Ref. 10 we write $I_g = G\bar{V}_c + |I_b| \sin \varphi_b + j\,(B\bar{V}_c + |I_b| \cos \varphi_b)$ (7) with $I_o = G\bar{V}_c$ $G = 1/R$ and $B = 1/X$ (reactance). For the steady state conditions assumed above the tuning servo makes $B\bar{V}_c = -\,|I_b| \cos \varphi_b$. However, if the tuning loop is slow as in the AGS, when I_B goes from zero to its nominal value I_g will not track $\bar{V}_c$ in phase immediately. Since we do not have a fast phase lock loop in the AGS we are tied to the phase of I_g which leads $\bar{V}_c$ under these conditions. Therefore the initial adjustment of the phase between I_b and $\bar{V}_c$ is a compromise until the radial and tuning loops have had time to act. In Eq. (7) one nominally has the station tuned to resonance for $I_b=0$ hence $B=B_o=0$ and then for a rapid change in I_b one needs a negative B. As pointed out in Ref. 10 one can alleviate the situation by detuning the cavity prior to injection. In this case making B negative corresponds to $\varphi_L > 0$ or a higher resonant frequency than the driving frequency. This is of course in the same direction as required for stability in example two above.

Another effect not related to beam loading which, however, might contribute to the transient behavior at injection is the following. For a finite $\dot{f}$ (at present $\approx$ 35 kc/msec at injection) the effective cavity inductance is increased[11] and hence increased tuning current is required. Since the change in starting oscillator frequency is fairly rapid it is possible that the tuning servo lags due to this effect also. Again a detuning on the high side would tend to alleviate this problem if indeed it is appreciable.

Future Study Program

A measurement of F_b and F_r up to at least 15 kc along with checks on the AGC response at 3-4 kV/gap for f_{rf} = 2.5 MHz should be made. Also repeats on the tuning response at these rf levels and measurements of σ will be required. Then tests with moderate to heavy beam loading and with the radial loop open and $\varphi_L = 0$ should be done to determine the nature of the instability and its frequency. A check with the theory can then be made and further studies with various values of φ_L and radial loop response carried out. The effect of the tuning loop response during the capture process should also be studied in the light of the above mentioned problems.

This program will be greatly facilitated by two changes being made during the present AGS shutdown. It will now be possible to observe the individual vernier tuning currents in the control room. Second it will be possible to change the offset applied in the phase loop of the vernier servos between two preset values at any time during the acceleration cycle. Hence φ_L can be varied over a large range at or near injection for each station and still be returned to a suitable value for proper operation later in the acceleration cycle when the rf amplitude can exceed 8 kV/gap.

References

1. U. Bigliani, CERN SI/EL Note/69-9, Dec. 1968.
2. F. Pedersen, IEEE Trans. on Nucl. Sci. NS-22, No. 3, 1906, (1975).
3. M. Plotkin, E.C. Raka and H. Snyder, U.S. Pat. 3,089,092, May 7, 1963.
4. H. Hahn, BNL Accel. Dept. Int. Rept. HH-1, April 1961.
5. E. Raka, BNL Accel. Dept. Int. Rept. ECR-5, August 1961.
6. E.D. Courant, BNL Accel. Dept. Int. Rept. EDC-40, October 1960.
7. E. Raka, IEEE Trans. on Nucl. Sci. NS-14, No. 3, 1091 (1967).
8. H. Hereward, Proc. 1961 Intern'l. Conf. H.E. Accel., Brookhaven, p.236.
9. Chestnut and Mayer, Servo Mechanisms and Regulating System Design, J. Wiley 1951, Vol. I, p.134.
10. G. Nassibian, CERN SI/Note EL/69-5, June 1969.
11. J.G. Cottingham, private communication, May 1976.

ECR/lsk

Distr: Dept. Admin.
Accel. Dept. Physicists
Accel. Dept. EE's
Oper. Coordinators
E. Gill

Fig. 1

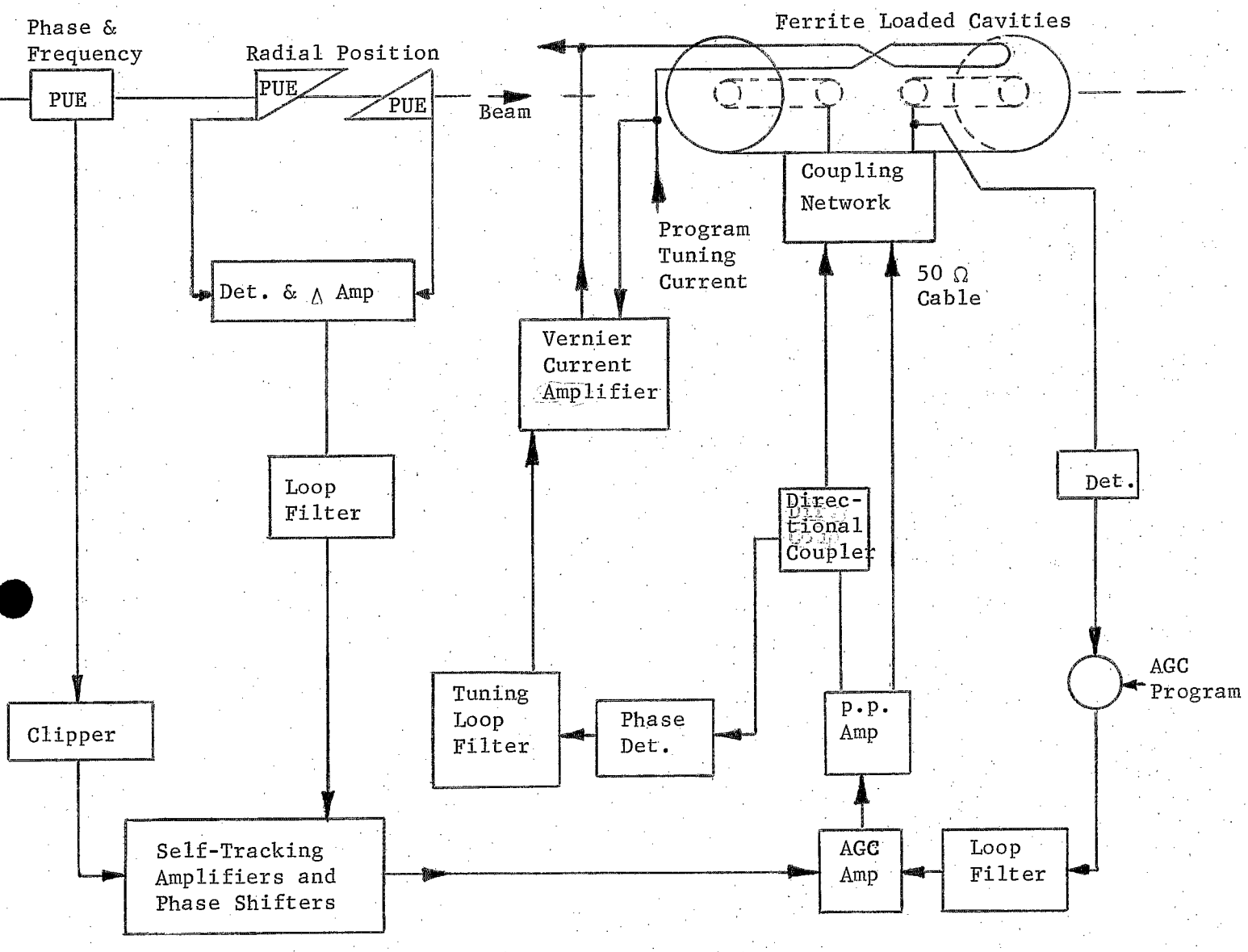

$$C_aC_T[B(F_r-F_b)+1](G^G_{aa}G_{xp}-G^G_{ap}G_{xa})+C_TC_pB(F_r-F_b)G_{xp}$$

$$+C_aC_p[B(F_r-F_b)](G^G_{aa}G^G_{pp}-G^G_{ap}G^G_{pa})+BC_a(G^G_{ap}G^B_{pa}-G^G_{aa}G^B_{pp})$$

$$+B\tan\phi_B[\frac{\omega_0^2}{s^2}(F_r-F_b)(G^G_{pa}G^B_{pp}-G^G_{pp}G^B_{pa}-G^G_{pa})+C_T(G_{xa}G^B_{pp}-G_{xp}G^B_{pa})-G^B_{pa}]$$

$$+B(F_r-F_b)G^G_{pp}+C_aG^G_{aa}+C_TG_{xp}-BG^B_{pp}+1=0 \quad . \qquad \text{Eq. (A)}$$

Fig. 2

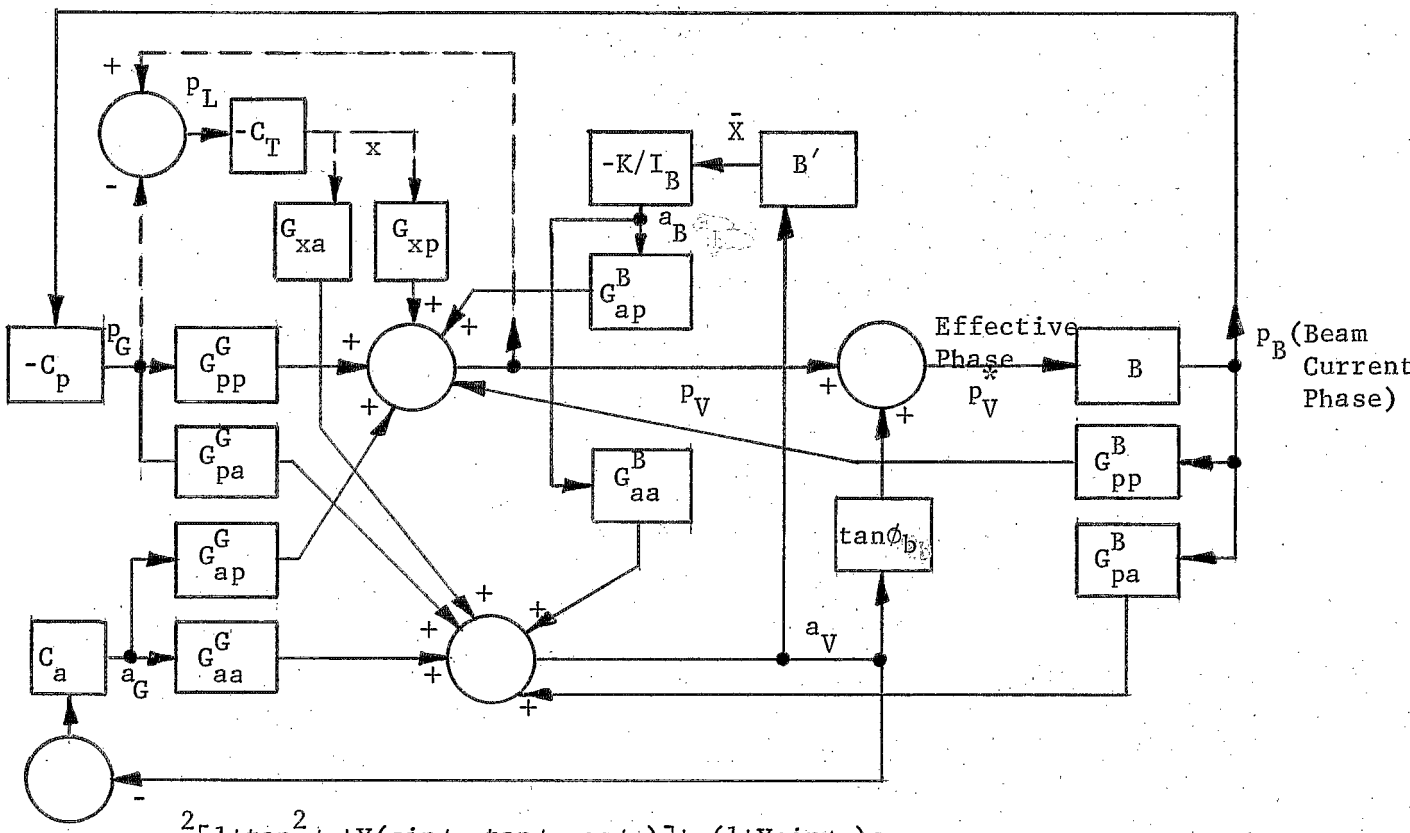

$$G^G_{pp}(s) = \frac{\sigma^2[1+\tan^2\phi_z+Y(\sin\phi_B-\tan\phi_z\cos\phi_B)]+\sigma(1+Y\sin\phi_B)s}{D}$$

$$G^G_{pa}(s) = \frac{-\sigma^2 Y(\cos\phi_B+\tan\phi_z\sin\phi_B)+\sigma s(\tan\phi_z-Y\cos\phi_B)}{D}$$

$$G^B_{pp}(s) = \frac{Y[\sigma^2(\tan\phi_z\cos\phi_B-\sin\phi_B)-\sigma\sin\phi_B s]}{D}$$

$$G^B_{pa}(s) = \frac{Y[\sigma^2(\tan\phi_z\sin\phi_B+\cos\phi_B)+\sigma s\cos\phi_B]}{D}$$

$$D = s^2+2\sigma s+\sigma^2(1+\tan^2\phi_z) \qquad B = \frac{\omega\omega_\varphi^2}{s^2+\omega_\varphi^2} \qquad B' = \frac{-\omega_\varphi^2}{s^2+4\omega_\varphi^2} \qquad C_p=(F_r-F_B)\frac{\omega_\varphi^2}{s^2}$$

$$G^G_{aa} = G^G_{pp} \qquad G^G_{ap} = -G^G_{pa} \qquad G^B_{aa} = G^B_{pp} \qquad G^B_{pa} = -G^B_{ap}$$

$$G_{xp}(s) = \frac{p_V(s)}{x(s)} = \frac{\sigma^2+\sigma s}{D} \qquad G_{xa}(s) = \frac{-\sigma^2\tan\phi_z}{D} = \frac{a_V(s)}{x(s)} \qquad \bar{x} = \frac{\Delta\omega_r}{\sigma} \qquad \sigma = \frac{\omega_{res}}{2Q}$$

C_a is AGC loop transfer function C_T is the tuning loop transfer function

F_r the radial loop transfer function can be written as $F_r = \frac{s\,R\,A(s)}{-\eta\gamma_{tr}^2\omega_{rf}}$ where

A(s) is the gain function of the electronics.

Accelerator Department
BROOKHAVEN NATIONAL LABORATORY
Associated Universities, Inc.
Upton, New York

ADDENDUM AND CORRECTIONS TO

AGS DIVISION TECHNICAL NOTE

No. 121

A BEAM LOADING ANALYSIS FOR THE AGS

E.C. Raka
July 27, 1976

Corrections

Page 3: The last two sentences of the first paragraph beginning, For the AGS, should be deleted.

Page 4,5,6: The entire section headed AGC, Tuning, and Beam Control Loops should be deleted.

Page 7: The last sentence of paragraph 3 beginning, This is of course, should be deleted.

Figure 1: Equation A should be deleted.

Figure 2: Delete the ω_φ^2/s^2 factor in the expression for C_p.

Addendum

On page 3 add in place of the above deletion the following:

We proceed to derive this for the AGS using Fig. 2 assuming, for reasons outlined below, that the tuning loop can be ignored. One then has the following set of equations--

$$a_G = -C_a a_V \qquad p_V = p_G G^G_{pp} + G^G_{ap} a_G + G^B_{ap} a_B + G^B_{pp} p_B$$

$$p_V^* = p_V + \tan\phi_B a_V \qquad a_V = G^G_{aa} a_G + G^G_{pa} p_G + G^B_{aa} a_B + G^B_{pa} p_B$$

$$a_B = -KB' a_V/I_B \qquad -C_p p_B = p_G \qquad Bp_V^* = p_B \tag{A}$$

which can be solved for an expression of the form $(1-BH)p_B = 0$ where the feedback from p_B to p_V^* is collected in H(s) and

$$H(s) = [(G^B_{pp}-C_pG^G_{pp})(1+C_aG^G_{aa}+G^B_{aa}KB'/I_B)-(C_aG^G_{ap}+G^B_{ap}KB'/I_B)(G^B_{pa}-C_pG^G_{pa})$$

$$+\tan\phi_B(G^B_{pa}-C_pG^G_{pa})] \div (1+C_aG^G_{aa}+G^B_{aa}KB'/I_B) \quad . \qquad (A')$$

The characteristic equation is then just $(1-BH(s)) = 0$ and in what follows we have also ignored the effect of i_B modulations, i.e. put $B' = 0$.

On page 4 etc. add in place of the above deletion the following:

<u>AGC, Tuning and Beam Control Loops</u>

We consider next the limiting case of an ideal phase loop (F_b=1) and the radial loop disabled. After considerable manipulation the characteristic equation, using A′ with B′ = 0, becomes

$$s^5+2\sigma s^4+s^3[\sigma^2(1+\tan^2\phi_z)+\omega_\varphi^2+\sigma\omega_c(1+Y\sin\phi_B)]+s^2[\sigma\omega_\varphi^2+\omega_c\sigma^2$$

$$(1+\tan^2\phi_z+Y\sin\phi_B-Y\tan\phi_z\cos\phi_B)-\sigma\omega_\varphi^2\tan\phi_z\tan\phi_B]+s[\omega_c\omega_\varphi^2\sigma$$

$$(1+Y\sin\phi_B)+0] = 0. \qquad (5)$$

Since the constant term is zero there is a root at s = 0 which does not cause instability. For $\phi_B \geq 0$ only the coefficient of s^2 is not positive definite. If we again assume $\phi_L = 0$ one obtains

$$\omega_\varphi^2\,[1-Y\sin\phi_B] + \omega_c\sigma\,[1+Y\sin\phi_B] > 0 \qquad (6)$$

as a necessary and easily satisfied condition for stability. Applying the Routh-Hunwitz[9] criterion to the coefficients, one obtains additional relations that are easily satisfied for the parameters chosen.

Thus under ideal conditions there should be no instability with the phase loop alone ($\phi_L = 0$). At present F_b is not known with any accuracy so a more

realistic analysis must await its measurement along with better values for σ and ω_c at injection. Since it is possible to operate with the radial loop open for $\approx$ 3 msec at injection one can study this particular case. Because one cannot readily vary F_b only changes in ω_c and ϕ_L can be investigated. Inclusion of the radial loop using the single time constant filters available can also be studied. With both loops open the stability conditions of the first example can also be tested.

ECR/lsk

Distr: Dept. Admin.
Accel. Dept. Physicists
Accel. Dept. EE's
Oper. Coordinators
E. Gill