4/27/89

Number 253

AGS Studies Report

Date(s) April 1989 Time(s) various
Experimenter(s) W.W. Frey, Y.Y. Lee, W. van Asselt
Reported by W. van Asselt
Subject Beam heating of ferrite magnets

Objectives

To explain the observed increase of the pressure in the "A" vacuum sector, where the A-10 straight section with the tune meter kickers is located. To investigate possible cures for the effect.

Introduction

Since the installation of the new ion pump power supplies, providing vacuum readings at each pump, it is observed that the vacuum in the A-10 straight section degrades as a function of the beam intensity. Figure 1 shows vacuum readings of two pumps in that straight section during the maintenance period, which started at April 18. The vacuum is seen to improve when the AGS was turned off and to degrade slowly when the AGS was brought back to high intensity running.

Leak checking and a radiation survey did not reveal any clue to the cause of the effect. The long time constant of the effect led to the hypothesis that it is caused by outgassing of the ferrite kicker magnets at A-10, which are being heated by the beam. To verify this a bench test was made on a one foot long test magnet, of which the ferrite is believed to have the same properties as the ferrite used in the kicker magnets. To simulate the beam, an RF power amplifier was connected to a rod through the magnet to a dummy load. Thermocouples were used to measure the temperature of the ferrite.

Experimental results

Figure 2 shows the temperature of the test magnet as a function of time for two RF frequencies at the indicated RMS currents. It is seen that heating of the ferrite indeed occurs and that the RF frequency is an important parameter. Figure 3 shows the fourier transform of the wall monitor signal at different times in the acceleration cycle. It shows that, besides the fundamental RF frequency, the second and third harmonic frequencies are strong lines in the spectra (the vertical scale is 10dB/).

Although the results in figure 2 were obtained with cw operation, while the the beam in the AGS has a much lower duty cycle, some heating of the ferrite due to the beam passing through might be expected, especially because the ferrite is in the vacuum, mounted between ceramic insulators and so the ferrite will lose heat by radiation only.

To increase the reluctance of the magnetic path and therefore decrease the magnetic flux, kicker magnets have been proposed in which the ferrite yoke is interrupted by copper plates [1]. In the test magnet this concept was tested by inserting copper foils under the top ferrite bricks, as indicated in figure 4a. The result of temperature measurements is shown in figure 5a for the same frequencies as in figure 2. It is seen that the magnet temperature can not be distinguished from ambient temperature, even though the currents through the magnet are much higher.

YY Lee suggested that a shorted coil as indicated in figure 4b would not pass any magnetic flux and therefore would also prevent the temperature rise. This concept was tested also on the test magnet with a 5mm*0.25mm copper strip around the top and bottom layer of ferrite bricks. The result is shown in figure 5b. It is seen that there is a small increase of the temperature of the ferrite, indicating that the magnetic flux in the ferrite has decreased by orders of magnitude by the shorted coils.

Conclusions

The measurements on the ferrite test magnet support the hypothesis that the beam is heating the ferrite of the kicker magnets at A-10 and that the resulting outgassing causes the increase in vacuum pressure. With the anticipated intensity increase in the next few years, this effect will lead towards an unacceptable situation. It is shown that a copper break will prevent the effect fully and that shorted coils will reduce the effect significantly. Especially the solution with the shorted coils is important, because it can be applied rather easily on the existing ferrite magnets.

With the copper breaks and with the shorted coils it was possible to increase the current through the magnet significantly, suggesting that the impedance as seen by the beam will reduce too. This should be investigated in more detail.

These tests should also be repeated with the ferrites which are proposed to be used for the Booster ejection and AGS injection kickers.

References

1. F. Voelker, G. Lambertson, Proc. Particle Accelerator Conf.1989

FIGURE 1

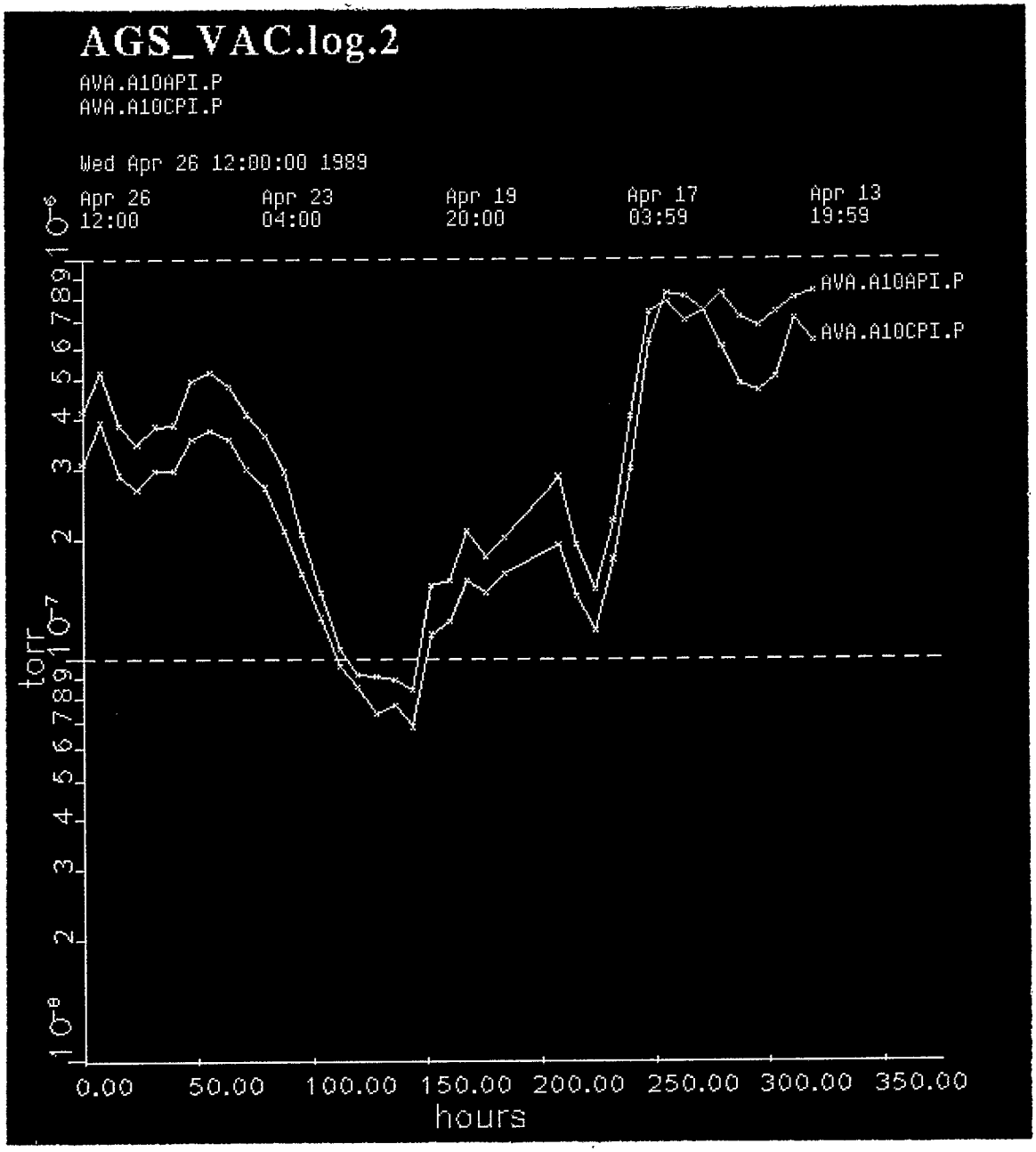
AGS_VAC.log.2
AVA.A10API.P
AVA.A10CPI.P
Wed Apr 26 12:00:00 1989
Apr 26 12:00
Apr 23 04:00
Apr 19 20:00
Apr 17 03:59
Apr 13 19:59
AVA.A10API.P
AVA.A10CPI.P
torr
hours
0.00
50.00
100.00
150.00
200.00
250.00
300.00
350.00

K+E 10 X 10 TO ½ INCH 7 X 10 INCHES
KEUFFEL & ESSER CO. MADE IN U.S.A.

FIGURE 2

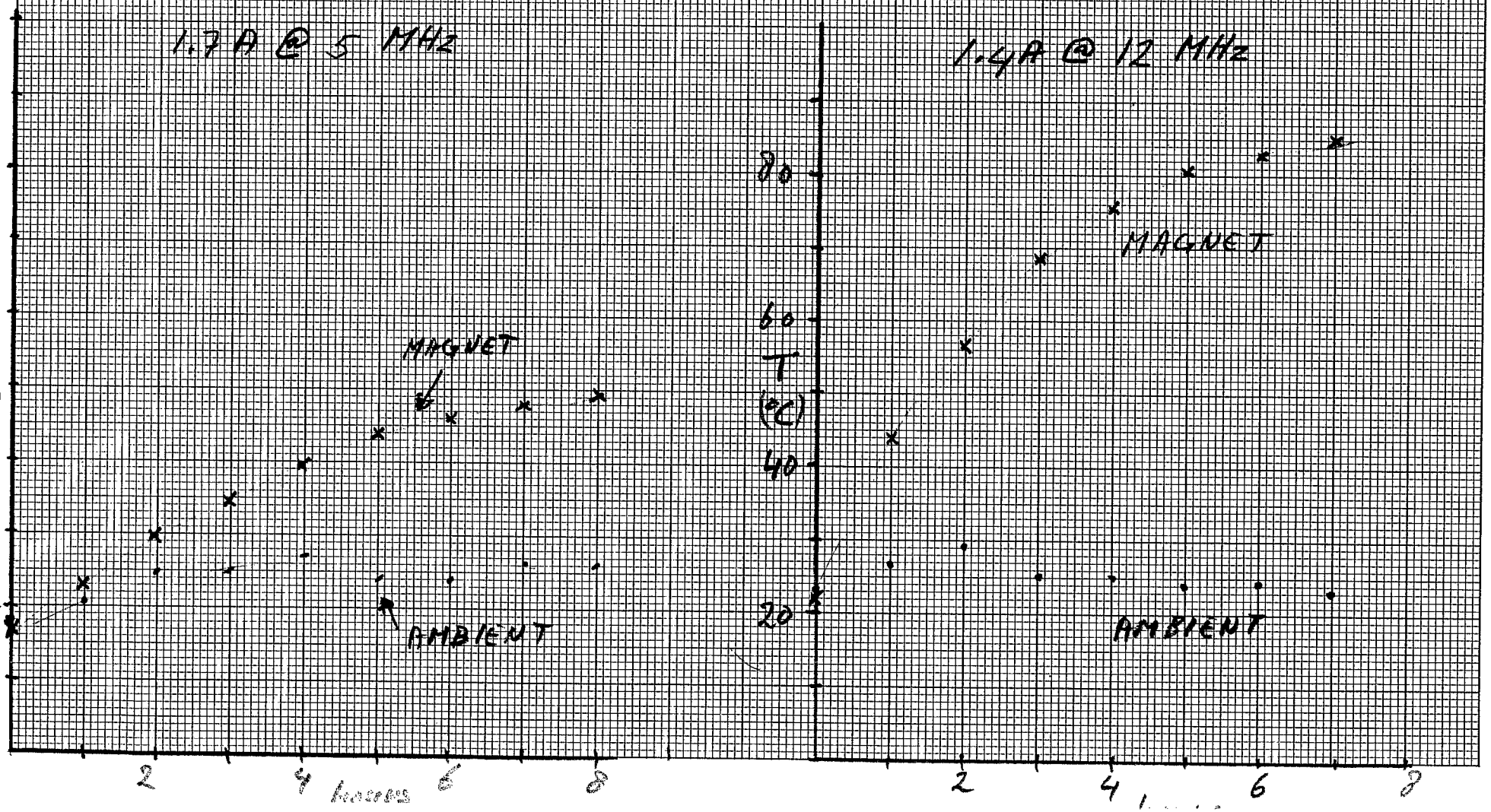

FIGURE 3

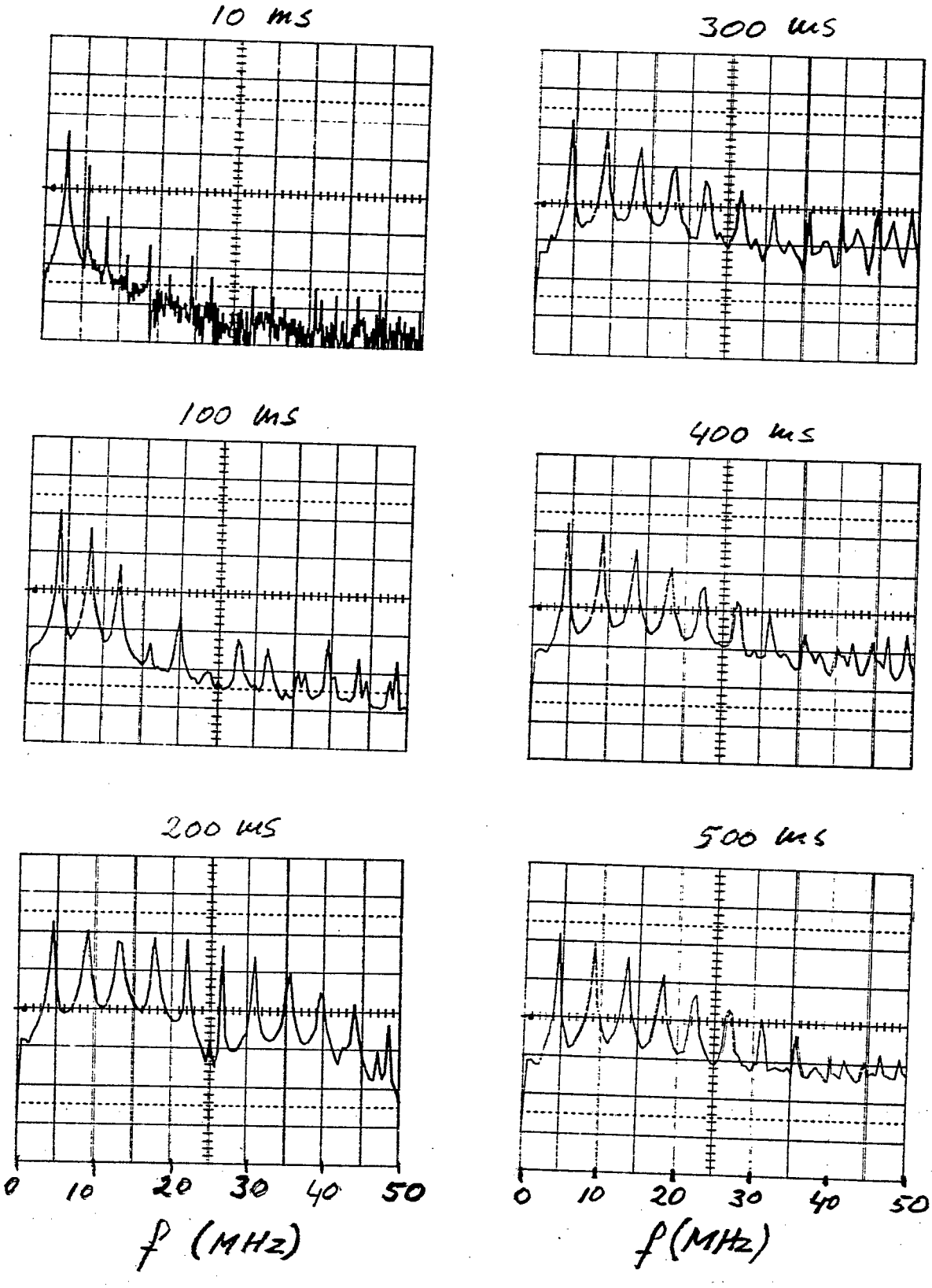
10 ms
300 ms
100 ms
400 ms
200 ms
500 ms
0
10
20
30
40
50
f (MHz)
0
10
20
30
40
50
f (MHz)

FIGURE 4a

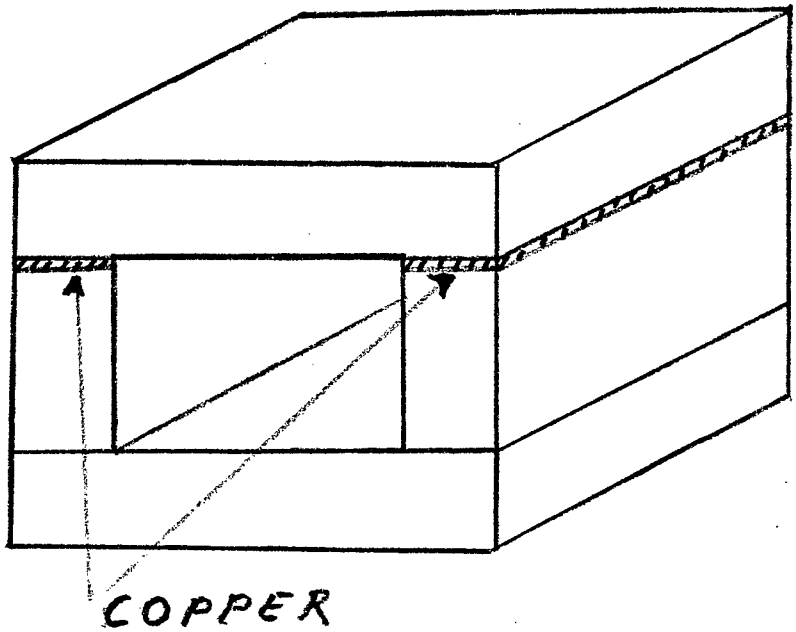

FIGURE 4b

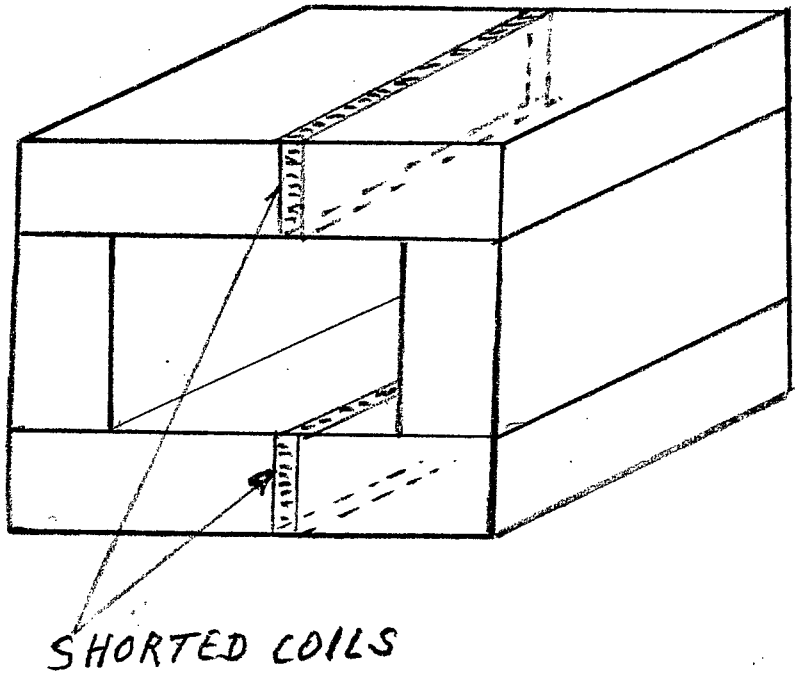

K+E 10 X 10 TO ½ INCH 7 X 10 INCHES
KEUFFEL & ESSER CO. MADE IN U.S.A.

46 1320

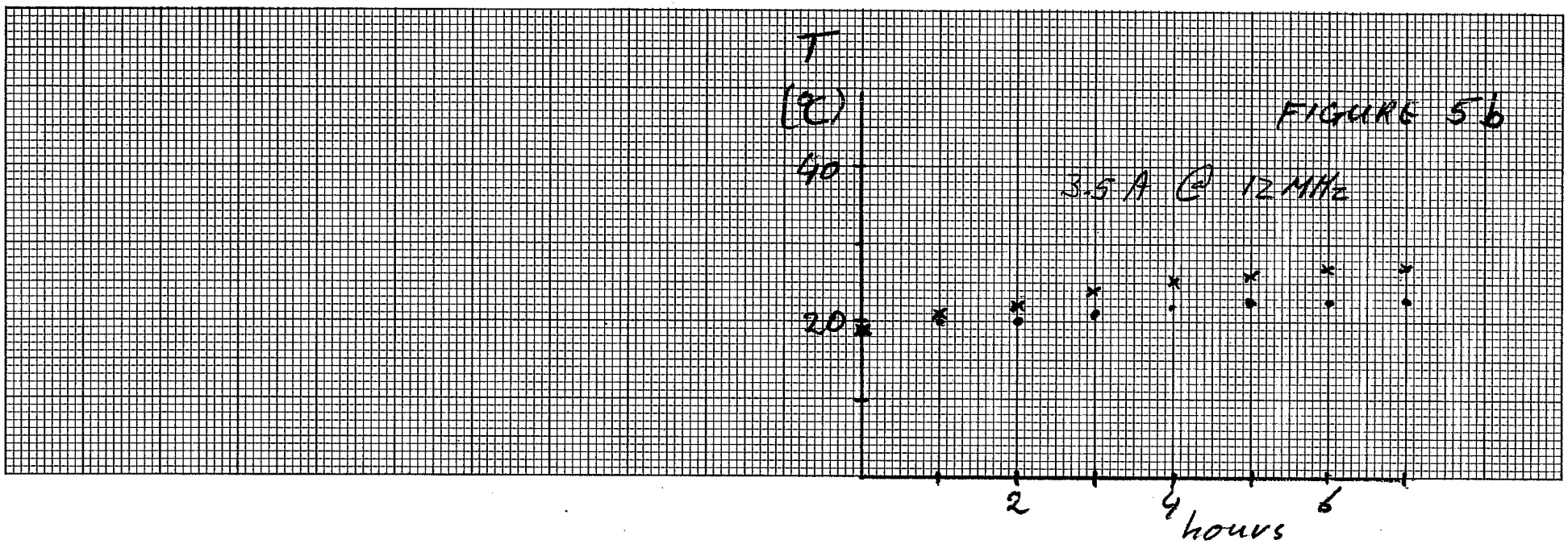

FIGURE 5b

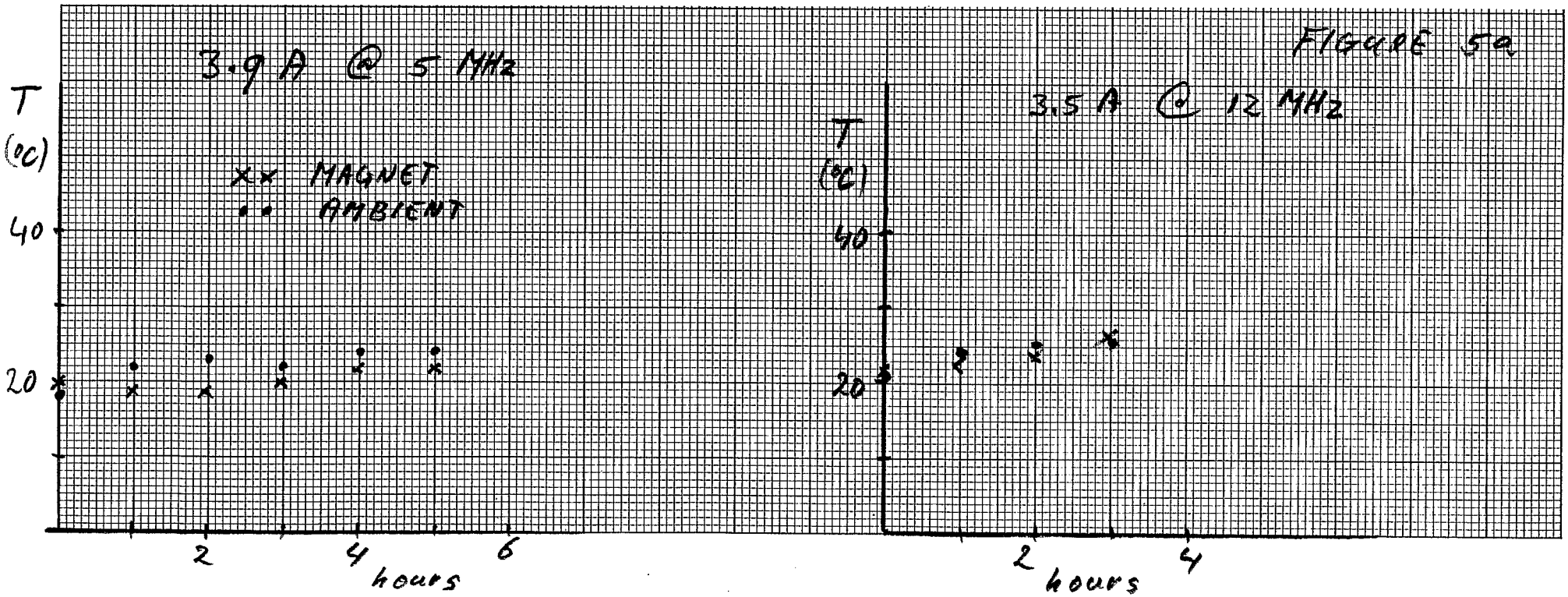

FIGURE 5a